Fire Protection Association

Important notice to purchasers of

LPC Rules for automatic sprinkler installations 2009

Incorporating BS EN 12845

How to keep your *Sprinkler rules* up-to-date

Thank you for purchasing the *LPC Rules for automatic sprinkler installations 2009 Incorporating BS EN 12845*. This publication is supported by an **updating service** to enable you to keep your *Sprinkler rules* fully up-to-date. Registration for the update service is free. Simply complete the form below and post or fax this page to the FPA Publications Department (contact details below) and you will be entered onto the register of subscribers. Alternatively, email all the details requested below to sales@thefpa.co.uk. Then, whenever updates are published containing amendments or additions to the Rules (normally once a year), your set/s of updates will be sent to you with an invoice covering their cost and postage. The cost will depend on the size and complexity of the updates.

- -

To: Publications Department, Fire Protection Association, London Road, Moreton in Marsh, Gloucestershire GL56 0RH; tel: +44 (0)1608 812 500; fax: +44 (0)1608 812 501; email: sales@thefpa.co.uk

Please record this registration for the priority update service for the *LPC Rules for automatic sprinkler installations 2009 Incorporating BS EN 12845*.

Please send us the following number of copies of each published set of updates:

☐ Copy/ies of the printed updates (for insertion in the looseleaf book)

☐ Copy/ies of the updates on CD (the CD will include the whole updated text of the *Sprinkler rules*)

We understand that updates will be sent to us with invoices for payment. We also understand that this arrangement will stand until such time as we cancel in writing.

Name ____________ Job title ____________

Organisation ____________

FPA account/membership reference number ____________

Address ____________

____

____

____

Telephone ____________ Fax ____________

Email* ____________

Signature ____________ Date ____________

* Your email address will only be used for contact with you regarding *LPC Sprinkler rules*. If you would like to receive further information from the FPA, including our monthly e-newsletter, please tick this box ☐

LPC Rules for Automatic Sprinkler Installations 2009

Incorporating BS EN 12845

RISCAuthority

FPA Fire Protection Association

IMPORTANT NOTICE

This document has been developed through the RISCAuthority and published by the Fire Protection Association (FPA). RISCAuthority membership comprises a group of UK insurers that actively support a number of expert working groups developing and promulgating best practice for the protection of people, property, business and the environment from loss due to fire and other risks. The technical expertise for this document has been provided by the Technical Directorate of the FPA, external consultants, and experts from the insurance industry who together form the various RISCAuthority Working Groups. Although produced with insurer input it does not (and is not intended to) represent a pan-insurer perspective. Individual insurance companies will have their own requirements which may be different from or not reflected in the content of this document.

The FPA has made extensive efforts to check the accuracy of the information and advice contained in this document and it is believed to be accurate at the time of printing. However, the FPA makes no guarantee, representation or warranty (express or implied) as to the accuracy or completeness of any information or advice contained in this document. All advice and recommendations are presented in good faith on the basis of information, knowledge and technology as at the date of publication of this document.

Without prejudice to the generality of the foregoing, the FPA makes no guarantee, representation or warranty (express or implied) that this document considers all systems, equipment and procedures or state-of-the-art technologies current at the date of this document.

Use of, or reliance upon, this document, or any part of its content, is voluntary and is at the user's own risk. Anyone considering using or implementing any recommendation or advice within this document should rely on his or her own personal judgement or, as appropriate, seek the advice of a competent professional and rely on that professional's advice. Nothing in this document replaces or excludes (nor is intended to replace or exclude), entirely or in part, mandatory and/or legal requirements howsoever arising (including without prejudice to the generality of the foregoing any such requirements for maintaining health and safety in the workplace).

Except to the extent that it is unlawful to exclude any liability, the FPA accepts no liability whatsoever for any direct, indirect or consequential loss or damage arising in any way from the publication of this document or any part of it, or any use of, or reliance placed on, the content of this document or any part of it.

Published by
Fire Protection Association
London Road, Moreton in Marsh
Gloucestershire GL56 0RH, UK
Tel: +44 (0)1608 812500 Fax: +44 (0)1608 812501
Email: administrator@riscauthority.co.uk
Website: www.riscauthority.co.uk

Sales
Email: sales@thefpa.co.uk
Website: www.thefpa.co.uk

First published 2003

ISBN 978-1-902790-68-8

This publication is a marked up version of BS EN 12845: 2004 + A2: 2009: *Fixed firefighting systems. Automatic sprinkler systems Design, installation and maintenance* (incorporating Corrigenda August 2009).

It includes within the page margins, notes by the FPA intended to guide the user to the corresponding parts of the FPA Technical Bulletins.

BSI takes no responsibility for the supplementary text added by the FPA.

Guidelines for the supply of water for fire sprinkler systems, which is based on an earlier FPA copyright document, is produced with the approval of the organisations which were involved in its preparation.

Printed by Information Press 09.09/1.2

Contents

September 2009

Foreword

Introduction

Part 1

BS EN 12845: 2004 + A2: 2009: *Fixed firefighting systems. Automatic sprinkler systems. Design, installation and maintenance* (incorporating Corrigenda August 2009)

Part 2

Technical Bulletins

Part 3

Supplementary information

Index

Foreword

The *LPC Rules for automatic sprinkler installations* have a distinguished pedigree and this latest part of the work continues the tradition.

The history of sprinklers in the UK started almost two centuries ago. One of the earliest sprinkler systems was installed in 1812 at the Theatre Royal, Drury Lane, London. From these tentative beginnings, and with the active encouragement of insurance companies, the development of sprinklers and the installation of sprinkler systems burgeoned. It was not for another three quarters of a century, in 1885, that John Wormald of the Mutual Fire Insurance Corporation, composed a set of sprinkler rules; measures for the design and installation of sprinkler systems. In 1888, these rules were published in London by the insurance companies' Fire Offices' Committee (FOC). The 29th and last edition of the FOC rules was published in 1969.

In 1952, with the approval and collaboration of the FOC, the British Standards Institution drew heavily upon the content of the FOC rules to produce its Code of Practice for sprinkler systems. That Code was enlarged and superseded by BS 5306-2: 1979: *Code of practice for fire extinguishing installations and equipment on premises (sprinkler systems).*

The growing importance of sprinklers as a means of protecting people and premises from the hazard of fire led to the elaboration of the1979 standard into a document which could be cited for legislative purposes. In 1990, the British Standards Institution issued BS 5306-2: 1990: *Fire extinguishing installations and equipment in buildings: Specification for sprinkler systems.* That document embodied in full the requirements of the 29th edition of the FOC rules, together with unpublished amendments thereto.

The activities of the FOC were acquired by the Loss Prevention Council (LPC) on its formation in 1985. In 1991, the LPC undertook the publication of its *LPC Rules for automatic sprinkler installations*, incorporating the text of BS 5306-2 together with a growing series of Technical Bulletins (eventually more than 30 of them).

At about the same time as the 1991 Rules were issued by the LPC, the Comité Européen de Normalisation (CEN) embarked upon the preparation of a set of European sprinkler rules, the UK version of which were published by BSI in August 2003 and re-issued in 2004.

This present volume, published by the Fire Protection Association, contains the text of the latest version of BS EN 12845: 2004 + A2: 2009: *Fixed firefighting systems. Automatic sprinkler systems. Design, installation and maintenance*, together with explanatory bulletins, under the title *LPC Rules for automatic sprinkler installations 2009 Incorporating BS EN 12845*.

Users of the *LPC Rules* benefit in a number of ways:

- they can be assured that the Technical Bulletins, developed through RISCAuthority, have had input from sprinkler system experts and from fire engineering practitioners from insurance companies;
- those involved in producing the LPC Rules have many years of experience of working on the earlier FOC and LPC Rules;
- the loose-leaf format (with its CD ROM backup) ensures continuous updating of the reference information;
- the format permits the addition of information about new system developments as they arise;
- by joining the subscribers' Priority Update Register, users can rely upon early and reliable provision of updated material.

This latest version of the LPC Rules is a comprehensive work of reference for anybody with a professional involvement in designing, specifying or installing sprinkler systems in Europe. It is commended without reservation.

Chris Hanks

General Manager, Allianz Insurance plc and Chairman of RISCAuthority

Introduction

The *LPC Rules for automatic sprinkler installations, incorporating BS EN 12845: 2003* as the core document was first published in 2003 and was supplemented by a series of Technical Bulletins. BS EN 12845: 2004 was published in 2004 and, although it was compatible for use with the *LPC Sprinkler rules*, this version was not published as part of the *LPC Sprinkler rules*. This new version of the *LPC Sprinkler rules* incorporates the revised specification BS EN 12845: 2004 + A2: 2009. This revised version incorporating Amendment 2 of the specification has introduced many of the corrections published in TB229: 2008: *LPC Rules for automatic sprinkler installations variations to BS EN 12845: 2003 and 2004*. The amendments in TB229: 2008 published as *LPC Rules* requirements have been retained and published in the revised TB229: 2009.

In this edition the following Technical Bulletins have been withdrawn:

- TB211: CPVC plastic pipe (superseded by TB227: Pipework);
- TB225: BS EN 12845: 2004 (superseded by BS EN 12845: 2004 + A2: 2009);

All other Technical Bulletins are retained with the following changes and additions:

- All republished Technical Bulletins have been checked for appropriate references and, where necessary, updated;
- TB203: *Care and maintenance of sprinkler installations* – revised throughout and now replaces BS EN Clause 20 in its entirety. This revised Technical Bulletin has been prepared with the assistance of the sprinkler industry in order to enable and expedite improved maintenance practices;
- TB210: *Automatic sprinkler pump installation* – change to paragraph TB210.12 (a);
- TB229: revised (see explanation above);
- TB232: *Sprinkler installation control valve sets* – introduces requirements for duplicate alarm valves for property protection installations to maintain availability of sprinkler protection during valve servicing.
- TB233: *Water supplies for life safety systems* – makes the recommendations of Approved Document B (ADB) available within the *Sprinkler rules* and describes how compliance may be achieved.

Core document BS EN 12845: 2004 + A2: 2009 now includes cross-references to relevant Technical Bulletins or their clauses in the page margins to assist users of these Rules.

BRITISH STANDARD

BS EN 12845:2004 +A2:2009

Incorporating Corrigenda August 2009

Fixed firefighting systems — Automatic sprinkler systems — Design, installation and maintenance

ICS 13.220.20

British Standards

National foreword

This British Standard is the UK implementation of EN 12845:2004 +A2:2009. It supersedes BS EN 12845:2004, which is withdrawn.

The start and finish of text introduced or altered by amendment is indicated in the text by tags. Tags indicating changes to CEN text carry the number of the CEN amendment. For example, text altered by CEN amendment A1 is indicated by [A1) (A1].

The UK participation in its preparation was entrusted by Technical Committee FSH/18, Fixed fire fighting systems, to Subcommittee FSH/18/2, Sprinkler systems.

A list of organizations represented on this subcommittee can be obtained on request to its secretary.

Based on long experience, the level of protection provided by all automatic fire sprinkler systems designed, installed and maintained in accordance with this standard is capable of providing safety to life in fire situations. In Annex F, the special requirements for life safety systems are for use where additional requirements are considered necessary to provide enhanced facilities, such as for water supply continuity, providing smaller sections for isolation within sprinkler systems and for facilitating rapid identification of areas where sprinklers are operating.

It is normal practice in the UK for the water supply to fire sprinkler equipment to be reserved solely for use by the fire sprinkler system. If the water supply is being considered for use for other purposes, such as connections to be taken from the fire sprinkler water supply to feed other services, consultation with the authorities having jurisdiction over the system is needed.

This publication does not purport to include all the necessary provisions of a contract. Users are responsible for its correct application.

Compliance with a British Standard cannot confer immunity from legal obligations.

This British Standard was published under the authority of the Standards Policy and Strategy Committee on 16 November 2004

ISBN 978 0 580 68733 4

Amendments/corrigenda issued since publication

Date	Comments
31 July 2009	Implementation of CEN amendment A2:2009
31 August 2009	Correction to National foreword

EUROPEAN STANDARD

NORME EUROPÉENNE

EUROPÄISCHE NORM

EN 12845:2004+A2

April 2009

ICS 13.220.20

Supersedes EN 12845:2004

English Version

Fixed firefighting systems - Automatic sprinkler systems - Design, installation and maintenance

Installations fixes de lutte contre l'incendie - Systèmes d'extinction automatiques du type sprinkleur - Conception, installation et maintenance

Ortsfeste Brandbekämpfungsanlagen - Automatische Sprinkleranlagen - Planung, Installation und Instandhaltung

This European Standard was approved by CEN on 16 April 2004 and includes Amendment 1 approved by CEN on 22 February 2009 and Amendment 2 approved by CEN on 22 February 2009.

CEN members are bound to comply with the CEN/CENELEC Internal Regulations which stipulate the conditions for giving this European Standard the status of a national standard without any alteration. Up-to-date lists and bibliographical references concerning such national standards may be obtained on application to the CEN Management Centre or to any CEN member.

This European Standard exists in three official versions (English, French, German). A version in any other language made by translation under the responsibility of a CEN member into its own language and notified to the CEN Management Centre has the same status as the official versions.

CEN members are the national standards bodies of Austria, Belgium, Bulgaria, Cyprus, Czech Republic, Denmark, Estonia, Finland, France, Germany, Greece, Hungary, Iceland, Ireland, Italy, Latvia, Lithuania, Luxembourg, Malta, Netherlands, Norway, Poland, Portugal, Romania, Slovakia, Slovenia, Spain, Sweden, Switzerland and United Kingdom.

EUROPEAN COMMITTEE FOR STANDARDIZATION
COMITÉ EUROPÉEN DE NORMALISATION
EUROPÄISCHES KOMITEE FÜR NORMUNG

Management Centre: Avenue Marnix 17, B-1000 Brussels

Ref. No. EN 12845:2004+A2:2009: E

Contents

page

Foreword ... 9

Introduction ... 10

1 Scope ... 12

2 Normative references ... 12

3 Terms and definitions ... 13

4 Contract planning and documentation ... 20
4.1 General ... 20
4.2 Initial considerations ... 21
4.3 Preliminary or estimating stage ... 21
4.4 Design stage ... 21
4.4.1 General ... 21
4.4.2 Summary schedule ... 22
4.4.3 Installation layout drawings ... 22
4.4.4 Water supply ... 25

5 Extent of sprinkler protection ... 27
5.1 Buildings and areas to be protected ... 27
5.1.1 Permitted exceptions within a building ... 27
5.1.2 Necessary exceptions ... 28
5.2 Storage in the open air ... 28
5.3 Fire resistant separation ... 28
5.4 Protection of concealed spaces ... 28
5.5 Height difference between the highest and lowest sprinklers ... 28

6 Classification of occupancies and fire hazards ... 29
6.1 General ... 29
6.2 Hazard classes ... 29
6.2.1 Light Hazard - LH ... 29
6.2.2 Ordinary Hazard - OH ... 29
6.2.3 High Hazard - HH ... 30
6.3 Storage ... 31
6.3.1 General ... 31
6.3.2 Storage Configuration ... 32

7 Hydraulic design criteria ... 34
7.1 LH, OH and HHP ... 34
7.2 High Hazard Storage - HHS ... 35
7.2.1 General ... 35
7.2.2 Ceiling or roof protection only ... 35
7.2.3 Intermediate level in-rack sprinklers ... 36
7.3 Pressure and flow requirements for pre-calculated systems ... 38
7.3.1 LH and OH systems ... 38
7.3.2 HHP and HHS systems without in-rack sprinklers ... 39

8 Water supplies ... 42
8.1 General ... 42
8.1.1 Duration ... 42

8.1.2 Continuity ... 42
8.1.3 Frost protection ... 42
8.2 Maximum water pressure ... 42
8.3 Connections for other services ... 43
8.4 Housing of equipment for water supplies ... 44
8.5 Test facility devices ... 44
8.5.1 At control valve sets ... 44
8.5.2 At water supplies ... 45
8.6 Water Supply test ... 45
8.6.1 General ... 45
8.6.2 Storage tank and pressure tank supplies ... 45
8.6.3 Town main, booster pump, elevated private reservoir and gravity tank supplies ... 45

9 Type of water supply ... 45
9.1 General ... 45
9.2 Town mains ... 46
9.2.1 General ... 46
9.2.2 Boosted mains ... 46
9.3 Storage tanks ... 46
9.3.1 General ... 46
9.3.2 Water volume ... 46
9.3.3 Refill rates for full capacity tanks ... 48
9.3.4 Reduced capacity tanks ... 48
9.3.5 Effective capacity of tanks and dimensions of suction chambers ... 49
9.3.6 Strainers ... 51
9.4 Inexhaustible sources - Settling and suction chambers ... 51
9.5 Pressure tanks ... 54
9.5.1 General ... 54
9.5.2 Housing ... 54
9.5.3 Minimum capacity (water) ... 54
9.5.4 Air pressure and contents ... 54
9.5.5 Charging with air and water ... 55
9.5.6 Control and safety equipment ... 55
9.6 Choice of water supply ... 56
9.6.1 Single water supplies ... 56
9.6.2 [A1] Superior single water supplies [A1] ... 56
9.6.3 Duplicate water supplies ... 57
9.6.4 Combined water supplies ... 57
9.7 Isolation of water supply ... 57

10 Pumps ... 58
10.1 General ... 58
10.2 Multiple pump arrangements ... 58
10.3 Compartments for pumpsets ... 58
10.3.1 General ... 58
10.3.2 Sprinkler protection ... 59
10.3.3 Temperature ... 59
10.3.4 Ventilation ... 59
10.4 Maximum temperature of water supply ... 59
10.5 Valves and accessories ... 59
10.6 Suction conditions ... 60
10.6.1 General ... 60
10.6.2 Suction pipe ... 60
10.7 Performance characteristics ... 64
10.7.1 Pre-calculated systems - LH and OH ... 64
10.7.2 Pre-calculated systems - HHP and HHS with no in-rack sprinklers ... 65
10.7.3 Calculated systems ... 65
10.7.4 Pressure and water capacity of boosted town mains ... 65

10.7.5 Pressure switches ... 66
10.8 Electrically driven pumpsets ... 66
10.8.1 General ... 66
10.8.2 Electricity supply ... 66
10.8.3 Main switchboard ... 66
10.8.4 Installation between the main switchboard and the pump controller ... 67
10.8.5 Pump controller ... 67
10.8.6 Monitoring of pump operation ... 67
10.9 Diesel engine driven pumpsets ... 68
10.9.1 General ... 68
10.9.2 Engines ... 68
10.9.3 Cooling system ... 68
10.9.4 Air filtration ... 68
10.9.5 Exhaust system ... 68
10.9.6 Fuel, fuel tank and fuel feed pipes ... 69
10.9.7 Starting mechanism ... 69
10.9.8 Electric starter motor batteries ... 70
10.9.9 Battery chargers ... 71
10.9.10 Siting of batteries and chargers ... 71
10.9.11 Starter alarm indication ... 71
10.9.12 Tools and spare parts ... 71
10.9.13 Engine tests and exercising ... 72

11 Installation type and size ... 72
11.1 Wet pipe installations ... 72
11.1.1 General ... 72
11.1.2 Protection against freezing ... 72
11.1.3 Size of installations ... 73
11.2 Dry pipe installations ... 73
11.2.1 General ... 73
11.2.2 Size of installations ... 74
11.3 Alternate installations ... 74
11.3.1 General ... 74
11.3.2 Size of installations ... 74
11.4 Pre-action installations ... 74
11.4.1 General ... 74
11.4.2 Automatic detection system ... 75
11.4.3 Size of installations ... 75
11.5 Subsidiary dry pipe or alternate extension ... 75
11.5.1 General ... 75
11.5.2 Size of subsidiary extensions ... 76
11.6 Subsidiary water spray extension ... 76

12 Spacing and location of sprinklers ... 76
12.1 General ... 76
12.2 Maximum area of coverage per sprinkler ... 77
12.3 Minimum distance between sprinklers ... 78
12.4 Location of sprinklers in relation to building construction ... 78
12.5 Intermediate sprinklers in HH occupancies ... 85
12.5.1 General ... 85
12.5.2 Maximum vertical distance between sprinklers at intermediate levels ... 85
12.5.3 Horizontal position of sprinklers at intermediate levels ... 85
12.5.4 Numbers of rows of sprinklers at each level ... 87
12.5.5 HHS intermediate sprinklers in non-shelved racks ... 88
12.5.6 HHS intermediate sprinklers below solid or slatted shelves in racks (ST5 and ST6) ... 88

13 Pipe sizing and layout ... 90
13.1 General ... 90
13.1.1 Pipe sizing ... 90

13.2 Calculation of pressure losses in pipework ... 90
13.2.1 Pipe friction loss ... 90
13.2.2 Static pressure difference ... 91
13.2.3 Velocity ... 91
13.2.4 Pressure loss through fittings and valves ... 91
13.2.5 Accuracy of calculations ... 93
13.3 Pre-calculated systems ... 93
13.3.1 General ... 93
13.3.2 Location of Design Points ... 93
13.3.3 Light Hazard - LH ... 94
13.3.4 Ordinary Hazard - OH ... 96
13.3.5 High hazard - HHP and HHS (except intermediate level sprinklers) ... 98
13.4.1 Design density ... 107
13.4.2 Locations of the area of operation ... 108
13.4.3 Shape of the area of operation ... 108
13.4.4 Minimum sprinkler discharge pressure ... 112
13.4.5 Minimum pipe diameters ... 112

14 Sprinkler design characteristics and uses ... 113
14.1 General ... 113
14.2 Sprinkler types and application ... 113
14.2.1 General ... 113
14.2.2 Ceiling, flush, recessed and concealed pattern ... 114
14.2.3 Sidewall pattern ... 114
14.2.4 Flat spray pattern ... 115
14.3 Flow from sprinklers ... 115
14.4 Sprinkler temperature ratings ... 115
14.5 Sprinkler thermal sensitivity ... 115
14.5.1 General ... 115
14.5.2 Interaction with other measures ... 116
14.6 Sprinkler guards ... 116
14.7 Sprinkler water shields ... 116
14.8 Sprinkler rosettes ... 117
14.9 Corrosion protection of sprinklers ... 117

15 Valves ... 117
15.1 Control valve set ... 117
15.2 Stop valves ... 117
15.3 Ring main valves ... 117
15.4 Drain valves ... 117
15.5 Test valves ... 118
15.5.1 Alarm and pump start test valves ... 118
15.5.2 Remote test valves ... 119
15.6 Flushing connections ... 119
15.7 Pressure gauges ... 119
15.7.1 General ... 119
15.7.2 Water supply connections ... 119
15.7.3 Control valve set ... 120
15.7.4 Removal ... 120

16 Alarms and alarm devices ... 120
16.1 Water flow alarms ... 120
16.1.1 General ... 120
16.1.2 Water motor and gong ... 120
16.1.3 Piping to water motor ... 120
16.2 Electrical water flow and pressure switches ... 121
16.2.1 General ... 121
16.2.2 Water flow alarm switches ... 121
16.2.3 Dry and pre-action systems ... 121

16.3 Fire brigade and remote central station alarm connection 121

17 Pipework 121
17.1 General 121
17.1.1 Underground piping 121
17.1.2 Above ground piping 122
17.1.3 Welding of steel pipe 122
17.1.4 Flexible pipes and joints 122
17.1.5 Concealment 122
17.1.6 Protection against fire and mechanical damage 123
17.1.7 Painting 123
17.1.8 Drainage 123
17.1.9 Copper pipe 123
17.2 Pipe supports 124
17.2.1 General 124
17.2.2 Spacing and location 124
17.2.3 Design 125
17.3 Pipework in concealed spaces 125
17.3.1 False ceilings above OH occupancies 125
17.3.2 All other cases 126

18 Signs, notices, and information 126
18.1 Block plan 126
18.1.1 General 126
18.2 Signs and notices 126
18.2.1 Location plate 126
18.2.2 Signs for stop valves 126
18.2.3 Control valve set 127
18.2.4 Water supply connections to other services 127
18.2.5 Suction and booster pumps 127
18.2.6 Electric switches and control panels 128
18.2.7 Testing and operating devices 128

19 [A2] Commissioning [A2] 129
19.1 Commissioning tests 129
19.1.1 Pipework 129
19.1.2 Equipment 129
19.1.3 Water supplies 129
19.2 Completion certificate and documents 129

20 Maintenance 130
20.1 General 130
20.1.1 Programmed work 130
20.1.2 Precautions while carrying out work 130
20.1.3 Replacement sprinklers 130
20.2 User's programme of inspection and checking 130
20.2.1 General 130
20.2.2 Weekly routine 131
20.2.3 Monthly routine 132
20.3 Service and maintenance schedule 132
20.3.1 General 132
20.3.2 Quarterly routine 132
20.3.3 Half-yearly routine 133
20.3.4 Yearly routine 134
20.3.5 3 Yearly routine 134
20.3.6 10 yearly routine 134

Annex A (normative) [A2] Classification of typical hazards 136

Annex B (normative) Methodology for categorizing stored goods 140

B.1 General ... 140
B.2 Material factor (M) ... 140
B.2.1 General ... 140
B.2.2 Material Factor 1 ... 140
B.2.3 Material factor 2 ... 141
B.2.4 Material factor 3 ... 142
B.2.5 Material factor 4 ... 142
B.3 Storage configuration ... 142
B.3.1 Effect of storage configuration ... 142
B.3.2 Exposed plastic container with non-combustible content ... 143
B.3.3 Exposed plastic surface - unexpanded ... 143
B.3.4 Exposed plastic surface - expanded ... 143
B.3.5 Open structure ... 143
B.3.6 Solid block materials ... 144
B.3.7 Granular or Powdered materials ... 144
B.3.8 No special configuration ... 144

Annex C (normative) Alphabetical listing of stored products and categories ... 145

Annex D (normative) Zoning of sprinkler installations ... 151
D.1 General ... 151
D.2 Zoning of installations ... 151
D.3 Requirements for zoned installations ... 151
D.3.1 Extent of zones ... 151
D.3.2 Zone subsidiary stop valves ... 151
D.3.3 Flushing Valves ... 152
D.3.4 Monitoring ... 152
D.3.5 Zone test and drainage facilities ... 152
D.3.6 Installation control valve set ... 152
D.3.7 Installation monitoring and alarms ... 152
D.4 Block plan ... 153

Annex E (normative) Special requirements for high rise systems ... 155
E.1 General ... 155
E.2 Design criteria ... 155
E.2.1 Hazard group ... 155
E.2.2 Subdivision of high rise sprinkler systems ... 155
E.2.3 Standing water pressures at non-return and alarm valves ... 155
E.2.4 Calculation of distribution pipework for pre-calculated systems ... 155
E.2.5 Water pressures ... 156
E.3 Water supplies ... 156
E.3.1 Types of water supplies ... 156
E.3.2 Pressure and flow requirements for pre-calculated installations ... 156
E.3.3 Water supply characteristics for pre-calculated installations ... 156
E.3.4 Pump performance for pre-calculated installations ... 156

Annex F (normative) Special requirements for life safety systems ... 159
F.1 Subdivision into zones ... 159
F.2 [A2] Wet pipe installations [A2] ... 159
F.3 Sprinkler type and sensitivity ... 159
F.4 Control Valve valve set ... 159
F.5 Water supplies ... 159
F.6 Theatres ... 159
F.7 Additional precautions for maintenance ... 160

Annex G (normative) Protection of [A2] *deleted text* [A2] special hazards ... 161
G.1 General ... 161
G.2 Aerosols ... 161
G.3 Clothes in multiple garment hanging storage ... 162

G.3.1 General ... 162
G.3.2 Categorization ... 162
G.3.3 Sprinkler protection other than at ceiling ... 162
G.3.4 Sprinklers in operation ... 162
G.3.5 Ceiling sprinklers ... 163
G.3.6 Automatic shutdown ... 163
G.3.7 Control valve set ... 163
G.4 Flammable liquid storage ... 165
G.5 Idle pallets ... 166
G.6 Spirit based liquors in wooden barrels ... 167
G.7 Non-woven synthetic fabric ... 167
G.7.1 Free standing storage ... 167
G.7.2 Rack storage ... 168
G.8 Polypropylene or polyethylene storage bins ... 168
G.8.1 General ... 168
G.8.2 Classification ... 168
G.8.3 Palletized rack storage (ST4) ... 168
G.8.4 All other storage ... 168
G.8.5 Foam additive ... 169

Annex H (normative) Sprinkler systems monitoring ... 170
H.1 General ... 170
H.2 Functions to be monitored ... 170
H.2.1 General ... 170
H.2.2 Stop valves controlling water flow to sprinklers ... 170
H.2.3 Other stop valves ... 170
H.2.4 Liquid levels ... 170
H.2.5 Pressures ... 170
H.2.6 Electrical power ... 171
H.2.7 Temperature ... 171

Annex I (normative) Transmission of alarms ... 172
I.1 Functions to be monitored ... 172
I.2 Alarm levels ... 172

Annex J (informative) Precautions and procedures when a system is not fully operational ... 174
J.1 Minimizing the effects ... 174
J.2 Planned shut-down ... 174
J.3 Unplanned shut-down ... 175
J.4 Action following sprinkler operation ... 175
J.4.1 General ... 175
J.4.2 Installations protecting cold storage warehouses (air circulation refrigeration) ... 175

Annex K (informative) Twenty-five year inspection ... 176

Annex L (informative) Special technology ... 177

Annex M (informative) [A1] Independent certification body [A1] ... 178

Bibliography ... 180

Foreword

This document (EN 12845:2004+A2:2009) has been prepared by Technical Committee CEN/TC 191, "Fixed firefighting systems", the secretariat of which is held by BSI.

This European Standard shall be given the status of a national standard, either by publication of an identical text or by endorsement, at the latest by October 2009, and conflicting national standards shall be withdrawn at the latest by October 2009.

[A1] This document supersedes [A2] EN 12845:2004 [A2]. [A1]

This document includes Amendment 1, approved by CEN on 2009-02-22 and Amendment 2, approved by CEN on 2009-02-22.

The start and finish of text introduced or altered by amendment is indicated in the text by tags [A1] [A1] and [A2] [A2].

[A1] *deleted text* [A1]

Annexes A to I are normative. The [A1] Annexes J to M [A1] are informative.

This document includes a Bibliography.

It is included in a series of European standards planned to cover:

— automatic sprinkler systems (EN 12259 and EN 12845);

— Gas extinguishing systems (EN 12094);

— powder systems (EN 12416);

— explosion protection systems (EN 26184);

— foam systems (EN 13565);

— gas systems (EN 12094);

— hydrant and hose reel systems (EN 671);

— smoke and heat control systems (EN 12101).

— [A1] *deleted text* [A1]

According to the CEN/CENELEC Internal Regulations, the national standards organizations of the following countries are bound to implement this European Standard: Austria, Belgium, Bulgaria, Cyprus, Czech Republic, Denmark, Estonia, Finland, France, Germany, Greece, Hungary, Iceland, Ireland, Italy, Latvia, Lithuania, Luxembourg, Malta, Netherlands, Norway, Poland, Portugal, Romania, Slovakia, Slovenia, Spain, Sweden, Switzerland and United Kingdom.

Introduction

An automatic sprinkler system is designed to detect a fire and extinguish it with water in its early stages or hold the fire in check so that extinguishment can be completed by other means.

A sprinkler system consists of a water supply (or supplies) and one or more sprinkler installations; each installation consists of a set of installation main control valves and a pipe array fitted with sprinkler heads. The sprinkler heads are fitted at specified locations at the roof or ceiling, and where necessary between racks, below shelves, and in ovens or stoves. The main elements of a typical installation are shown in Figure 1.

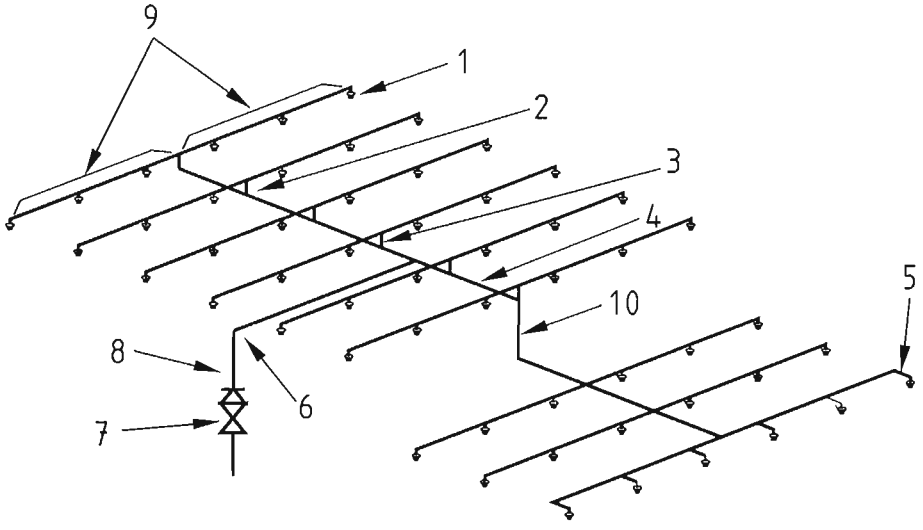

Key

1 Sprinkler head
2 Riser
3 Design point
4 Distribution pipe spur
5 Arm pipe
6 Main distribution pipe
7 Control valve set
8 Riser
9 Range pipes
10 Drop

Figure 1 — Main elements of a sprinkler installation

The sprinklers operate at predetermined temperatures to discharge water over the affected part of the area below. The flow of water through the alarm valve initiates a fire alarm. The operating temperature is generally selected to suit ambient temperature conditions.

Only sprinklers in the vicinity of the fire, i.e. those which become sufficiently heated, operate.

The sprinkler system is intended to extend throughout the premises with only limited exceptions.

In some life safety applications an authority might specify sprinkler protection only in certain designated areas and solely to maintain safe conditions for the evacuation of persons from the sprinkler protected areas.

It should not be assumed that the provision of a sprinkler system entirely obviates the need for other means of fighting fires and it is important to consider the fire precautions in the premises as a whole.

Structural fire resistance, escape routes, fire alarm systems, particular hazards needing other fire protection methods, provision of hose reels and fire hydrants and portable fire extinguishers, etc., safe working and goods handling methods, management supervision and good housekeeping all need consideration.

It is essential that sprinkler systems should be properly maintained to ensure operation when required. This routine is liable to be overlooked or given insufficient attention by supervisors. It is, however, neglected at peril to the lives of occupants of the premises and at the risk of crippling financial loss. The importance of proper maintenance cannot be too highly emphasized.

When sprinkler systems are out of service extra attention should be paid to fire precautions and the appropriate authorities informed.

This standard is intended for use by those concerned with purchasing, designing, installing, testing, inspecting, approving, operating and maintaining automatic sprinkler systems, in order that such equipment will function as intended throughout its life.

This standard is intended only for fixed fire sprinkler systems in buildings and other premises on land. Although the general principles may well apply to other uses (e.g. maritime use), for these other uses additional considerations will almost certainly have to be taken into account.

It is a basic assumption that this standard is for the use of companies employing personnel competent in the field of application with which it deals. Only trained and experienced personnel should undertake the design, installation and maintenance of sprinkler systems. Similarly, competent technicians should be used in the installation and testing of the equipment A1 (see Annex M) A1.

TB201.3

This standard covers only the types of sprinkler specified in EN 12259-1 (see annex L).

1 Scope

This standard specifies requirements and gives recommendations for the design, installation and maintenance of fixed fire sprinkler systems in buildings and industrial plant, and particular requirements for sprinkler systems, which are integral to measures for the protection of life.

This standard covers only the types of sprinkler specified in EN 12259-1 (see annex L).

The requirements and recommendations of this standard are also applicable to any addition, extension, repair or other modification to a sprinkler system. They are not applicable to water spray or deluge systems.

It covers the classification of hazards, provision of water supplies, components to be used, installation and testing of the system, maintenance, and the extension of existing systems, and identifies construction details of buildings which are the minimum necessary for satisfactory performance of sprinkler systems complying with this standard.

This standard does not cover water supplies to systems other than sprinklers. Its requirements can be used as guidance for other fixed fire fighting extinguishing systems, however, provided that any specific requirements for other fire fighting extinguishing supplies are taken into account.

[A1] *deleted text* [A1]

The requirements are not valid for automatic sprinkler systems on ships, in aircraft, on vehicles and mobile fire appliances or for below ground systems in the mining industry.

[A1] Sprinkler system design deviations may be allowed when such deviations have been shown to provide a level of protection at least equivalent to this European Standard, for example by means of full scale fire testing where appropriate, and where the design criteria have been fully documented. [A1]

2 Normative references

The following referenced documents are indispensable for the application of this document. For dated references, only the edition cited applies. For undated references, the latest edition of the referenced document (including any amendments) applies.

EN 54-1, *Fire detection and fire alarm systems — Introduction*

EN 54-2, *Fire detection and fire alarm systems — Control and indicating equipment*

EN 54-3, *Fire detection and fire alarm systems — Fire alarm devices — Sounders*

EN 54-4, *Fire detection and fire alarm systems — Power supply equipment*

EN 54-5, *Fire detection and fire alarm systems — Heat detectors — Point detectors*

EN 54-10, *Fire detection and fire alarm systems — Flame detectors — Point detectors*

EN 54-11, *Fire detection and fire alarm systems — Manual call points*

EN 287-1, *Approval testing of welders — Fusion welding — Part 1: Steels*

EN 1057, *Copper and copper alloys — Seamless, round copper tubes for water and gas in sanitary and heating applications*

[A1] EN 1254 (all parts) [A1], *Copper and copper alloys — Plumbing fittings*

EN 12259-1, *Fixed firefighting systems — Components for sprinkler and water spray systems — Part 1: Sprinklers*

EN 12259-2, *Fixed firefighting systems — Components for sprinkler and water spray systems — Part 2: Wet alarm valve assemblies*

EN 12259-3, *Fixed firefighting systems — Components for sprinkler and water spray systems — Part 3: Dry alarm valve assemblies*

EN 12259-4, *Fixed firefighting systems — Components for sprinkler and water spray systems — Part 4: Water motor alarms*

EN 12259-5, *Fixed firefighting systems — Components for sprinkler and water spray systems — Part 5: Water flow detectors*

prEN 12259-12, *Fixed firefighting systems — Components for sprinkler and water spray systems — Part 12:* [A1] *Sprinkler pumps* [A1]

EN 12723, *Liquid pumps — General terms for pumps and installations — Definitions, quantities, letter symbols and units*

[A1] EN 50342-1, *Lead-acid starter batteries — Part 1: General requirements and methods of test*

EN 50342-2, *Lead-acid starter batteries — Part 2: Dimensions of batteries and marking of terminals* [A1]

EN 60529, *Degrees of protection provided by enclosures (IP code) (IEC 60529:1989)*

EN 60623, *Secondary cells and batteries containing alkaline or other non-acid electrolytes — Vented nickel-cadmium prismatic rechargeable single cells (IEC 60623:2001)*

EN 60947-1, *Low-voltage switchgear and controlgear — Part 1: General rules* [A1] *(IEC 60947-1:2007)* [A1]

EN 60947-4, *Low-voltage switchgear and controlgear — Contactors and motor-starters — Electromechanical contactors and motor-starters (IEC 60947-4-1:2000)*

EN ISO 3677, *Filler metal for soft soldering, brazing and braze welding — Designation (ISO 3677:1992)*

ISO 65, *Carbon steel tubes suitable for screwing in accordance with ISO 7-1*

[A1] ISO 3046 (all parts), *Reciprocating internal combustion engines — Performance* [A1]

3 Terms and definitions

For the purposes of this document, the following terms and definitions apply.

3.1
'A' gauge
pressure gauge connected to a town main connection, between the supply pipe stop valve and the non-return valve

3.2
accelerator
device that reduces the delay in operation of a dry alarm valve, or composite alarm valve in dry mode, by early detection of the drop in air or inert gas pressure on sprinkler operation

3.3
alarm test valve
valve through which water may be drawn to test the operation of the water motor fire alarm and/or of any associated electric fire alarm

3.4
alarm valve
non-return valve, of the wet, dry or composite type that also initiates the water motor fire alarm when the sprinkler installation operates

3.5
alarm valve, alternate
alarm valve suitable for a wet, dry or alternate installation

3.6
alarm valve, dry
alarm valve suitable for a dry installation; and/or in association with a wet alarm valve for an alternate installation

3.7
alarm valve, pre-action
alarm valve suitable for a pre-action installation

3.8
alarm valve, wet
alarm valve suitable for a wet installation

3.9
area of operation
the maximum area, over which it is assumed, for design purposes, that sprinklers will operate in a fire

3.10
area of operation, hydraulically most favourable
the location in a sprinkler array of an area of operation of specified shape at which the water flow is the maximum for a specific pressure measured at the control valve set

3.11
area of operation, hydraulically most unfavourable
the location in a sprinkler array of an area of operation of specified shape at which the water supply pressure measured at the control valve set is the maximum needed to give the specified design density

3.12
arm pipe
pipe less than 0,3 m long, other than the last section of a range pipe, feeding a single sprinkler

3.13
authorities
organizations responsible for approving sprinkler systems, equipment and procedures, e.g. the fire and building control authorities, the fire insurers, the local water authority or other appropriate public authorities

3.14
'B' gauge
pressure gauge connected to and on the same level as an alarm valve, indicating the pressure on the upstream side of the valve

3.15
booster pump
automatic pump supplying water to a sprinkler system from a gravity tank or town main

3.16
'C' gauge
pressure gauge connected to and on the same level as an alarm valve, indicating the pressure on the downstream side of the valve

3.17
control valve set
assembly comprising an alarm valve, a stop valve and all the associated valves and accessories for the control of one sprinkler installation

3.18
cut-off sprinkler
sprinkler protecting a door or window between two areas only one of which is protected by sprinklers

3.19
design density
the minimum density of discharge, in millimetres per minute of water, for which a sprinkler installation is designed, determined from the discharge of a specified group of sprinklers, in litres per minute, divided by the area covered, in square metres

3.20
design point
point on a distribution pipe of a precalculated installation, downstream of which pipework is sized from tables and upstream of which pipework is sized by hydraulic calculation

3.21
distribution pipe
pipe feeding either a range pipe directly or a single sprinkler on a non-terminal range pipe more than 300 mm long

3.22
distribution pipe spur
distribution pipe from a main distribution pipe, to a terminal branched pipe array

3.23
drencher
sprayer used to distribute water over a surface to provide protection against fire exposure

3.24
drop
vertical distribution pipe feeding a distribution or range pipe below

3.25
end-centre array
pipe array with range pipes on both sides of a distribution pipe

3.26
end-side array
pipe array with range pipes on one side only of a distribution pipe

3.27
exhauster
device to exhaust the air or inert gas from a dry or alternate installation to atmosphere on sprinkler operation to give more rapid operation of the alarm valve

3.28
fire resistant compartment
enclosed volume capable of maintaining its fire integrity for a minimum specified time

3.29
fully calculated
term applied to an installation in which all the pipework is sized by hydraulic calculation

3.30
gridded configuration
pipe array in which water flows to each sprinkler by more than one route

3.31
hanger
assembly for suspending pipework from elements of building structure

3.32
high rise system
sprinkler system in which the highest sprinkler is more than 45 m above the lowest sprinkler or above the sprinkler pumps, whichever is the lower

3.33
inexhaustible sources
natural and artificial water sources such as rivers, canals and lakes which are virtually inexhaustible for reasons of capacity and climate etc.

3.34
installation (sprinkler installation)
part of sprinkler system comprising a control valve set, the associated downstream pipes and sprinklers

3.35
installation, alternate
installation in which the pipework is selectively charged with either water or air/inert gas according to ambient temperature conditions

3.36
installation, dry (pipe)
installation in which the pipework is charged with air or inert gas under pressure

3.37
installation, pre-action
one of two types of dry, or alternate in dry mode, installation in which the alarm valve can be opened by an independent fire detection system in the protected area

3.38
installation, wet (pipe)
installation in which the pipework is always charged with water

[A2] *deleted text* [A2]

3.39
[A2] **life safety system**
term applied to sprinkler systems forming an integral part of measures required for the protection of life, especially where evacuating the building depends on the performance of the sprinkler system and sprinklers are required expressly for life safety purposes [A2]

TB233

3.40
looped configuration
pipe array in which there is more than one distribution pipe route along which water may flow to a range pipe

3.41
main distribution pipe
pipe feeding a distribution pipe

3.42
[A2] **Maximum Flow Demand Q_{max}**
flow at the point of intersection of the pressure-flow demand characteristic of the most favourable area of operation and the water supply pressure-flow characteristic with the suction source at its normal level [A2]

TB210.T1

3.43
mechanical pipe joint
pipe fitting other than threaded tubulars, screwed fittings, spigots and socket and flanged joint, used to connect pipes and components

3.44
multi-storey building
building comprising two or more storeys, above or below ground

3.45
node
point in pipework at which pressure and flow(s) are calculated; each node is a datum point for the purpose of hydraulic calculations in the installation

3.46
normal water level
the water level at the water supply needed to give the required effect capacity in relation to the low water level, including any necessary margins e.g. for ice

3.47
pipe array
the pipes feeding a group of sprinklers. Pipe arrays can be looped, gridded or branched

3.48
pre-calculated
term applied to an installation in which the pipes downstream of the design point(s) have been previously sized by hydraulic calculation. Tables of diameters are given

[A2] **3.49**
pressure maintenance pump (jockey pump)
small automatic pumpset used to replenish minor water loss and maintain system pressure [A2]

3.50
pressure tank
A tank containing water under air pressure sufficient to ensure that all the water can be discharged at the necessary pressure

3.51
range pipe
pipe feeding sprinklers either directly or via arm pipes

3.52
riser
vertical distribution pipe feeding a distribution or range pipe above

3.53
sprayer
water spray nozzle that gives a downward conical pattern discharge

3.54
sprinkler (automatic)
nozzle with a thermally sensitive sealing device which opens to discharge water for fire fighting

3.55
sprinkler, ceiling or flush
pendent sprinkler for fitting partly above, but with the temperature sensitive element below, the lower plane of the ceiling

3.56
sprinkler, concealed
recessed sprinkler with a cover plate that disengages when heat is applied

3.57
sprinkler, conventional pattern
sprinkler that gives a spherical pattern of water discharge

3.58
sprinkler, dry pendent pattern
unit comprising a sprinkler and a dry drop pipe unit with a valve, at the head of the pipe, held closed by a device maintained in position by the sprinkler head valve

3.59
sprinkler, dry upright pattern
unit comprising a sprinkler and dry rise pipe unit with a valve, at the base of the pipe, held closed by a device maintained in position by the sprinkler head valve

3.60
sprinkler, spray flat
sprinkler that gives a pattern of water discharge with a proportion of the discharge directed above the level of the deflector

3.61
sprinkler, fusible link
sprinkler which opens when a component provided for the purpose melts

3.62
sprinkler, glass bulb
sprinkler which opens when a liquid-filled glass bulb bursts

3.63
sprinkler, horizontal
sprinkler in which the nozzle directs water horizontally

3.64
sprinkler, open
sprinkler not sealed by a temperature sensitive element

3.65
sprinkler, pendent
sprinkler in which the nozzle directs water downwards

3.66
sprinkler, recessed
sprinkler in which all or part of the heat sensing element is above the lower plane of the ceiling

3.67
sprinkler rosette
plate covering the gap between the shank or body of a sprinkler projecting through a suspended ceiling, and the ceiling

3.68
sprinkler, sidewall pattern
sprinkler that gives an outward half-paraboloid pattern discharge

3.69
sprinkler, spray pattern
sprinkler that gives a downward paraboloid pattern discharge

3.70
sprinkler, upright
sprinkler in which the nozzle directs water upwards

[A1⟩ *deleted text* ⟨A1]

3.71
sprinkler system
the entire means of providing sprinkler protection in the premises comprising one or more sprinkler installations, the pipework to the installations and the water supply/supplies

3.72
sprinkler yoke (arms)
the part of a sprinkler that retains the heat sensitive element in load bearing contact with the sprinkler head valve

3.73
staggered (sprinkler) layout
off-set layout with the sprinklers displaced one-half pitch along the range pipe relative to the next range or ranges

3.74
standard (sprinkler) layout
rectilinear layout with the sprinklers aligned perpendicular to the run of the ranges

3.75
subsidiary alternate (wet and dry pipe) extension
part of a wet installation which is selectively charged with water or air/inert gas according to ambient temperature conditions and which is controlled by a subsidiary dry or alternate alarm valve

3.76
subsidiary dry extension
part of a wet or alternate installation that is charged permanently with air or inert gas under pressure

TB201

3.77
suitable for sprinkler use
term applied to equipment or components accepted by the authorities as suitable for a particular application in a sprinkler system, either by conforming to EN product standards where available or if not by compliance with specified criteria

3.78
supply pipe
pipe connecting a water supply to a trunk main or the installation control valve set(s); or a pipe supplying water to a private reservoir or storage tank

3.79
suspended open cell ceiling
ceiling of regular open cell construction through which water from sprinklers can be discharged freely

3.80
terminal main configuration
pipe array with only one water supply route to each range pipe

3.81
terminal range configuration
pipe array with only one water supply route from a distribution pipe

3.82
trunk main
pipe connecting two or more water supply pipes to the installation control valve set(s)

3.83
water supply datum point
point on the installation pipework at which the water supply pressure and flow characteristics are specified and measured

3.84
zone
sub-division of an installation with a specific flow alarm and fitted with a monitored subsidiary stop

TB205

4 Contract planning and documentation

4.1 General

The information specified in 4.3 and 4.4 shall be provided to the user or owner as appropriate. All drawings and information documents shall carry the following information:

a) the name of the user and the owner, where known;

b) the address and location of premises;

c) the occupancy of each building;

d) the name of the designer;

e) the name of the person responsible for checking the design, who shall not be the designer;

f) date and number of issue.

TB205

4.2 Initial considerations

When preparing the outline design, consideration shall be given to aspects of building design, building systems and work procedures that might affect the performance of the sprinkler system.

Although an automatic sprinkler system usually extends throughout a building or plant, it should not be assumed that this entirely obviates the need for other means of fire protection and it is important to consider the fire precautions of the premises as a whole. Account shall be taken of possible interaction between sprinkler systems and other fire protection measures.

Where a sprinkler system or an extension or alteration to a sprinkler system is being considered for new or existing buildings and industrial plant the relevant authorities shall be consulted at an early stage.

NOTE 2 The authorities should be consulted when the hazard classification is being determined.

TB205.1
TB226.5

4.3 Preliminary or estimating stage

At least the following information shall be provided:

a) a general specification of the system; and

b) a block plan of the premises showing:

1) the type(s) of installation(s) and the hazard class(es) and storage categories in the various buildings;

2) the extent of the system with details of any unprotected areas;

3) the construction and occupancy of the main building and any communicating and/or neighbouring buildings;

4) a cross-section of the full height of the building(s) showing the height of the highest sprinkler above a stated datum level;

c) general details of the water supplies, which if town main shall include pressure flow data, with the date and time of test, and a plan of the test site; and

d) [A2] a statement that the estimate is based on the provision of a sprinkler system to this European Standard, based on available information. [A2]

TB205.2 (a)

4.4 Design stage

4.4.1 General

The information provided shall include a summary schedule (see 4.4.2), complete working drawings of the sprinkler installation(s) (see 4.4.3) and details of the water supplies (see 4.4.4).

TB205.2 (b)

TB205.2 (b)

4.4.2 Summary schedule

The summary schedule shall give the following information:

a) the name of project;

b) all drawings or document reference numbers;

c) all drawings or document issue numbers;

d) all dates of issue of drawing or documents;

e) all drawing or document titles;

f) the type(s) of installation(s) and the nominal diameter(s) of each control valve set;

g) the number or references of each control valve set in the system;

h) the number of sprinklers on each control valve set;

i) the piping volume in the case of dry or alternate installations;

j) the height of the highest sprinkler on each control valve set;

k) A2 a statement that the installation has been designed and will be installed in accordance with this European Standard or giving details of any deviations from its requirements and the reasons why, based on available information; A2

l) a list of the components suitable for sprinkler use included in the system, each identified by supplier's name and model/reference number.

4.4.3 Installation layout drawings

4.4.3.1 General

Layout drawings shall include the following information:

a) north point indication;

b) the class or classes of installation according to hazard class, including storage category and design storage height;

c) construction details of floors, ceilings, roofs, exterior walls and walls separating sprinklered and non-sprinklered areas;

d) sectional elevations of each floor of each building showing the distance of sprinklers from ceilings, structural features, etc. which affect the sprinkler layout or the water distribution from the sprinklers;

e) the location and size of concealed roof or ceiling voids, offices and other enclosures sealed at a level lower than the roof or ceiling proper;

f) indication of trunking, stagings, platforms, machinery, light fittings, heaters, suspended open cell ceilings etc. which may adversely affect the sprinkler distribution;

g) the sprinkler type(s) and temperature rating(s);

h) the type and approximate location of pipe supports;

i) the location and type of control valve sets and location of water motor alarms;

j) the location and details of any water flow, and air or water pressure alarm switches;

k) the location and size of any subsidiary valves, subsidiary stop valves and drain valves;

l) the drainage slope of the pipework;

m) a schedule listing the numbers of sprinklers, sprayers etc., and the area of protection;

n) the location of all test valves;

o) the location and details of any alarm panel;

p) the location and details of any fire department inlet connections;

q) a key to the symbols used.

4.4.3.2 Pre-calculated pipework

For pre-calculated pipework the following details shall be given on, or with, the drawings:

a) identification of the design point of each array on the layout drawing (for example, as in Figure 18);

b) a summary of the pressure losses between the control valve set and the design points at the following design rates of flow:

TB205.2 (b)

1) in an LH installation - 225 l/min;
2) in an OH installation - 1000 l/min;
3) in an HH installation - the flow corresponding to the appropriate design density given in Table 7 or in 7.3.2.2.

c) The calculation as specified in 13.3, showing that:

1) in LH and OH installations, for each run of distribution pipework,

$$p_f - p_h$$

is no more than the appropriate value specified in 13.3.3 or 13.3.4; and/or

2) in HHP and HHS installations designed using Tables 32 to 35,

$$p_f + p_d + p_s$$

is no more than the residual pressure available at the control valve set from the water supply when it is tested at the appropriate flow rate,

where

p_d is the pressure at the design point specified in Table 7 or as appropriate, in bar;

p_f is the frictional pressure loss in the distribution pipework between the design point and the control valve 'C' gauge, in bar;

p_h is the static pressure between the level of the highest design point on the floor concerned and the level of the highest design point in the top storey, in bar;

p_s is the static head loss owing to the height of the highest sprinkler in the array concerned above the control valve 'C' gauge, in bar.

4.4.3.3 Fully calculated pipework

For fully calculated pipework, the following shall be given, with detailed calculations, either on purpose designed work sheets or as a computer printout:

a) the program name and version number;

b) the date of the worksheet or print-out;

c) the actual internal diameters of all pipes used in the calculation;

d) for each design area of operation;

1) the area identification;

2) the hazard class;

3) the specified design density in millimetres per minute;

4) the assumed maximum area of operation (area of operation) in square metres;

TB205.2 (b)

5) the number of sprinklers in the area of operation;

6) the sprinkler nominal orifice size in millimetres;

7) the maximum area covered per sprinkler in square metres;

8) detailed and dimensioned working drawings showing the following:

i) the node or pipe reference scheme used to identify pipes, junctions, sprinkler heads and fittings which need hydraulic consideration;

ii) the position of the hydraulically most unfavourable area of operation;

iii) the position of the hydraulically most favourable area of operation;

iv) the four sprinklers upon which the design density is based;

v) the height above datum of each point of identified pressure value.

e) for each operating sprinkler:

1) the sprinkler node or reference number;

2) the nominal K factor (see EN 12259-1);

3) the flow through the sprinkler in litres per minute;

4) the inlet pressure to the sprinkler or sprinkler assembly in bar.

f) for each hydraulically significant pipe:

1) pipe node or other reference number;

2) nominal bore in millimetres;

3) the Hazen-Williams constant;

4) flow in litres per minute;

5) velocity in metres per second;

6) length in metres;

7) numbers, types and equivalent length in metres of fittings and components;

8) static head change in metres;

9) pressures at inlet and outlet in bar;

10) friction loss in bar;

11) indication of flow direction.

4.4.4 Water supply

4.4.4.1 Water supply drawings

TB205.2 (b)

The drawings shall show water supplies and pipework therefrom up to the control valve set. A key to the symbols shall be included. The position and type of stop and non-return valves and any pressure reducing valves, water meters, back flow preventers and any connections supplying water for other services, shall be indicated.

4.4.4.2 Hydraulic calculation

A hydraulic calculation shall show that the minimum water supply characteristics are capable of providing the required pressure and flow at the control valve set.

4.4.4.3 Town main

Where a town main forms one or both of the supplies or provides infill to a reduced capacity storage tank, the following details shall be given:

a) the nominal diameter of the main;

b) whether the main is double-end fed or dead-end; if dead-end, the location of the nearest double-end fed main connected to it;

c) the pressure/flow characteristic graph of the town main determined by a test at a period of peak demand. At least three pressure/flow points shall be obtained. The graph shall be corrected for friction losses and static head difference between the test location and either the control valve 'C' gauge or the suction tank infill valve, as appropriate;

d) the date and time of the town main test;

e) the location of the town main test point relative to the control valve set.

Where the pipework is fully calculated the following additional details shall be given:

f) a pressure/flow characteristic graph indicating the available pressure at any flow up to the maximum flow demand;

g) the demand pressure/flow characteristic graph for each installation for the hydraulically most unfavourable (and if required the most favourable) area of operation with pressure taken as at the control valve 'C' pressure gauge.

4.4.4.4 Automatic pump set

The following details of each automatic pump set shall be provided:

a) a pump characteristic curve for low water level 'X' (see Figures 4 and 5), showing the estimated performance of the pump or pumps under installed conditions at the control valve 'C' gauge.

b) the pump supplier's data sheet showing the following:

   1) the generated head graph;

   2) the power absorption graph;

   3) the net positive suction head (NPSH) graph;

   4) a statement of the power output of each prime mover.

TB205.2 (b)

c) the installer's data sheet showing the pumpset installed performance pressure/flow characteristics, at the control valve 'C' gauge for normal water level and for low water level 'X' (see Figures 4 and 5), and at the pump outlet pressure gauge for normal water level;

d) the height difference between the control valve 'C' gauge and the pump delivery pressure gauge;

e) the installation number and the hazard classification(s);

f) the available and the specified NPSH at maximum required flow;

g) the minimum depth of water cover of submersible pumps.

Where the pipework is fully calculated the following additional details shall be provided:

h) the demand pressure/flow characteristic for the hydraulically most unfavourable and most favourable area of operation calculated at the control valve 'C' gauge.

4.4.4.5 Storage tank

The following details shall be provided:

a) the location;

b) the total volume of the tank;

c) the effective capacity of the tank and duration;

d) the inflow for reduced capacity tanks;

e) the vertical distance between the pump centre line and the tank low water level 'X';

f) structural details of the tank and roof;

g) the recommended frequency of scheduled repairs requiring emptying of the tank;

h) protection against freezing;

i) low and normal water levels X and N (see Figure 4);

j) height of gravity tank above the highest sprinkler.

4.4.4.6 Pressure tank

TB205.2 (b)

The following details shall be provided:

a) the location;

b) the total volume of the tank;

c) the volume of stored water;

d) the air pressure;

e) the height of the highest and/or hydraulically most remote sprinkler above the bottom of the tank;

f) the vertical distance of the lowest sprinklers below the bottom of the tank;

g) details of the means of refilling.

5 Extent of sprinkler protection

5.1 Buildings and areas to be protected

Where a building is to be sprinkler protected, all areas of that building or of a communicating building shall be sprinkler protected, except in the cases indicated in 5.1.1 and 5.1.2 and 5.3.

Consideration should be given to the protection of load bearing steel.

5.1.1 Permitted exceptions within a building

TB206

Sprinkler protection shall be considered in the following cases, but may be omitted after due consideration of the fire load in each case:

a) washrooms and toilets (but not cloakrooms) of non-combustible materials and which are not used to store combustible materials;

b) enclosed staircases and enclosed vertical shafts (e.g. lifts or service shafts) containing no combustible material and constructed as a fire resistant separation (see 5.3).

c) rooms protected by other automatic extinguishing systems, (e.g. gas, powder and water spray);

d) wet processes such as the wet end of paper making machines.

5.1.2 Necessary exceptions

Sprinkler protection shall not be provided in the following areas of a building or plant:

a) silos or bins containing substances which expand on contact with water;

b) in the vicinity of industrial furnaces or kilns, salt baths, smelting ladles or similar equipment if the hazard would be increased by the use of water in extinguishing a fire;

c) areas, rooms or places where water discharge might present a hazard.

NOTE In these cases, other automatic extinguishing systems should be considered, (e.g. gas or powder).

5.2 Storage in the open air

TB206

The distance between combustible materials stored in the open air and the sprinklered building shall correspond to regulatory provisions in the place of use.

Where it is not regulated, the distance between combustible materials stored in the open air and the sprinklered building shall be no less than 10 m or 1,5 times the height of the stored material.

NOTE Such a fire resistant separation can be achieved by a firewall or by a suitable exposure protection system.

5.3 Fire resistant separation

The separation between a sprinkler protected area and a non-protected area shall have a fire resistance specified by the authority but in no case less than 60 min. Doors shall be self-closing or be closed automatically in the event of fire.

NOTE No part of an unsprinklered building or section should be located vertically below a sprinklered building or section except as indicated in 5.1.1 and 5.1.2

5.4 Protection of concealed spaces

If the height of the concealed space at roof and floor exceeds 0,8 m, measured between the underside of the roof and the top of the suspended ceiling or between the floor and the underside of the raised floor, these spaces shall be sprinkler protected.

TB230

If the height of the concealed space at roof and floor is no greater than 0,8 m, the spaces shall be sprinkler protected only if they contain combustible materials or are constructed with combustible materials. Electrical cables with voltage less than 250V, single phase, with a maximum of 15 cables per tray, are allowed.

The protection in the concealed space shall be to LH when the main hazard class is LH, and OH1 in all other cases. See 17.3 for the pipework arrangement.

5.5 Height difference between the highest and lowest sprinklers

Where the height difference between the highest and lowest sprinklers in a system or building exceeds 45 m the requirements of annex E shall be applied.

The height difference between the highest and lowest sprinkler on an installation (i.e. connected to a single control valve set) shall not exceed 45 m.

6 Classification of occupancies and fire hazards

6.1 General

The hazard class to which the sprinkler system is to be designed shall be determined before the design work is begun.

The buildings and areas to be protected by the automatic sprinkler system shall be classified as Light Hazard, Ordinary Hazard or High Hazard.

This classification depends on the occupancy and the fire load. Examples of occupancies are given in annex A.

Where there are areas in open communication having different hazard classification, the higher design criteria shall be extended at least two rows of sprinklers into the area with the lower classification.

TB215
TB216

6.2 Hazard classes

Buildings or areas to be protected which contain one or more of the following occupancies and fire hazards shall be classified as belonging to the appropriate hazard class, as follows:

6.2.1 Light Hazard - LH

Occupancies with low fire loads and low combustibility and with no single compartment greater than 126 m² with a fire resistance of at least 30 min. See annex A for examples.

6.2.2 Ordinary Hazard - OH

Occupancies where combustible materials with a medium fire load and medium combustibility are processed or manufactured. See annex A for examples.

Ordinary Hazard - OH, is sub-divided into 4 groups:

— OH1, Ordinary Hazard Group 1;

— OH2, Ordinary Hazard Group 2;

— OH3, Ordinary Hazard Group 3;

— OH4, Ordinary Hazard Group 4.

TB215
TB216
TB217
TB223
(For EPEC)

Materials may be stored in occupancies classified as OH1, 2 and 3 provided the following conditions are met:

a) the protection throughout the room shall be designed to at least OH3;

b) the maximum storage heights shown in Table 1 shall not be exceeded;

c) the maximum storage areas shall be 50 m^2 for any single block, with no less than 2,4 m clearance around the block.

When the process occupancy is classified as OH4, storage areas shall be treated as HHS.

TB228.T1

Table 1 — [A2] Maximum storage heights for OH3 protection [A2]

Storage Category	Maximum storage height (see Note 1) m	
	Free standing or block storage (ST1 - see 6.3.2)	All other cases (ST2 - ST6 - see 6.3.2)
Category I	4,0	3,5
Category II	3,0	2,6
Category III	2,1	1,7
Category IV	1,2	1,2

[A2] NOTE [A2] For storage heights exceeding these values, see 6.2.3.1. and 7.2.

[A2] *deleted text* [A2]

6.2.3 High Hazard - HH

6.2.3.1 High Hazard, Process - HHP

High Hazard, Process, covers occupancies where the materials concerned have a high fire load and high combustibility and are capable of developing a quickly spreading or intense fire.

HHP is sub-divided into four groups:

— HHP1, High Hazard Process Group 1;

— HHP2, High Hazard Process Group 2;

— HHP3, High Hazard Process Group 3;

TB215
TB216
TB217

— HHP4, High Hazard Process Group 4.

NOTE HHP4 hazards are usually protected by deluge systems, which are not within the scope of this standard.

6.2.3.2 High Hazard, Storage - HHS

High Hazard, Storage, covers the storage of goods where the height of storage exceeds the limits given in 6.2.2.

High Hazard, Storage - HHS, is sub-divided into four categories:

— HHS1, High Hazard Storage Category I;

— HHS2, High Hazard Storage Category II;

— HHS3, High Hazard Storage Category III;

— HHS4, High Hazard Storage Category IV.

NOTE Examples are given in annex B and annex C.

6.3 Storage

6.3.1 General

The overall fire hazard of stored goods is a function of the combustibility of the materials being stored, including their packaging, and of the storage configuration.

To determine the required design criteria when stored goods are involved, the procedure shown in Figure 2 shall be followed.

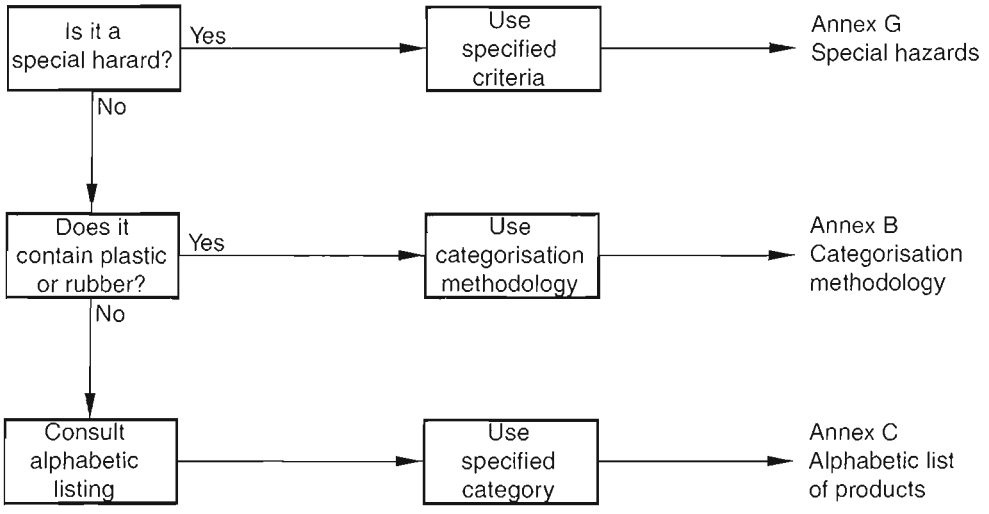

Figure 2 — Flow chart for determining the class required for storage

NOTE Where none of these annexes is fully applicable, and large scale fire test data are available, it can be appropriate to use such data to establish design criteria.

6.3.2 Storage Configuration

The storage configuration shall be classified as follows:

— ST1: free standing or block stacking;

— ST2: post pallets in single rows, with aisles not less than 2,4 m wide;

— ST3: post pallets in multiple (including double) rows;

— ST4: palletized rack (beam pallet racking);

— ST5: solid or slatted shelves 1 m or less wide;

— ST6: solid or slatted shelves over 1 m and no more than 6 m wide;

Typical examples of storage configurations are given in Figure 3.

NOTE For each storage method, there are specific limitations to storage heights depending on the type and design of sprinkler systems (see 7.2).

In order for sprinkler protection to be effective, the limitations and protection requirements of Table 2 shall be met.

Table 2 — Limitations and protection requirements for different storage configurations

Storage Configuration	Layout limitations	Protection in addition to sprinklers at ceiling or roof	Applicable table notes:
ST1	Storage shall be confined to blocks not exceeding 150 m^2 in plan area for C III and IV.	None	2, 3
ST2	[A1] Aisles between rows shall be not less than 2,4 m wide. [A1]	None	2
ST3	Storage shall be confined to blocks not exceeding 150 m^2 in plan area.	None	2
ST4	Aisles separating rows are equal or greater than 1,2 m wide.	Intermediate sprinklers are recommended.	1, 2
	Aisles separating rows are less than 1,2 m wide.	Intermediate sprinklers are required.	1
ST5	Either the aisles separating rows shall be no less than 1,2 m wide, or storage blocks shall be no more than 150 m² in plan area.	Intermediate sprinklers are recommended.	1, 2
ST6	Either the aisles separating rows shall be no less than 1,2 m wide, or storage blocks shall be no more than 150 m² in plan area.	Intermediate sprinklers are required or, if this is impossible, continuous full height vertical bulkheads with Euroclass A1 or A2 or an equivalent in existing national classification systems shall be fitted longitudinally and transversely within each shelf.	1, 2

NOTE 1 When the ceiling is more than 4 m above the highest level of stored goods, intermediate levels of in-rack sprinklers should be used.

NOTE 2 Storage blocks should be separated by aisles no less than 2,4 m wide.

NOTE 3 Storage should be confined to blocks not exceeding 150 m^2 in plan area for C I and C II.

TB229.3.1

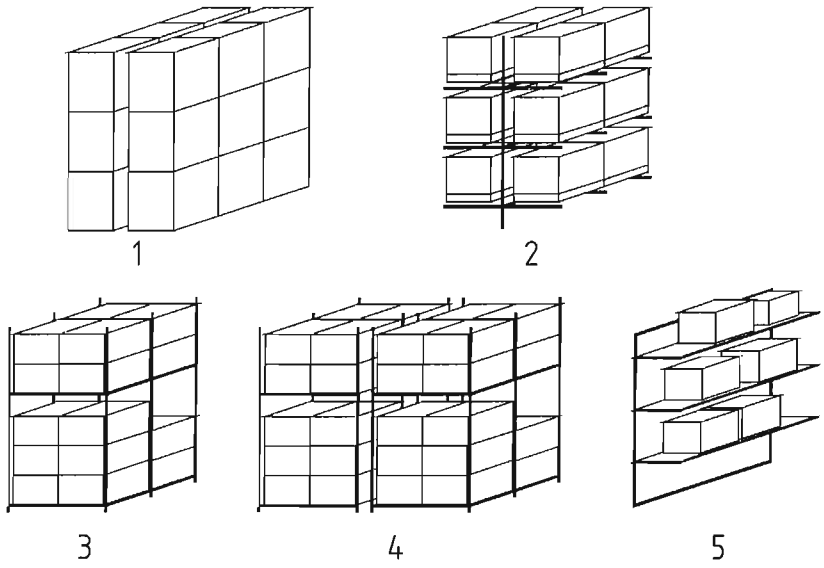

Key
1 Free-standing storage (ST1)
2 Palletized rack (ST4)
3 Post-pallet storage (ST2)
4 Post-pallet storage (ST3)
5 Solid or slatted shelves (ST 5/6)

Figure 3 — Storage configuration

7 Hydraulic design criteria

7.1 LH, OH and HHP

The design density shall be no less than the appropriate value given in this clause when all the ceiling or roof sprinklers in the room concerned, or in the area of operation, whichever is the fewer, plus any in-rack sprinklers and supplementary sprinklers, are in operation. The minimum requirements for design density and area of operation for LH, OH and HHP classes are given in Table 3. For HHS systems, 7.2 shall be applied.

NOTE For pre-calculated systems, the design criteria are achieved by the application of water supply and piping requirements stated elsewhere in this standard (see 7.3, 9.3.2.2 and 10.7).

Table 3 — Design criteria for LH, OH and HHP

Hazard Class	Design Density mm/min	Area of Operation m²	
		Wet or pre-action	Dry or alternate
LH	2,25	84	Not allowed Use OH1
OH1	5,0	72	90
OH2	5,0	144	180
OH3	5,0	216	270
OH4	5,0	360	Not allowed Use HHP1
HHP1	7,5	260	325
HHP2	10,0	260	325
HHP3	12,5	260	325
HHP4	deluge (see NOTE)		

NOTE Needs special consideration. Deluge systems are not covered by this standard.

7.2 High Hazard Storage - HHS

7.2.1 General

The type of protection and determination of the design density and area of operation are dependent on the combustibility of the product (or mix of products) and its packaging (including the pallet) and the method and height of storage.

Specific limitations apply to the various types of storage methods as detailed in clause 6.

7.2.2 Ceiling or roof protection only

Table 4 specifies the appropriate design density and area of operation according to the category and maximum permitted storage height for the various types of storage with roof or ceiling protection only. More specifically, the storage heights indicated in the table are considered the maximum for efficient sprinkler protection where sprinklers are only provided at the roof or ceiling.

NOTE 1 The distance between the maximum permitted storage height and the roof or ceiling sprinklers should not exceed 4 m.

Where storage heights exceed these limits or where the distance between the top of the storage and the roof or ceiling exceeds 4 m, intermediate levels of in-rack sprinklers shall be provided as per 7.2.3 below.

NOTE 2 Storage height, building height and ceiling clearance (the vertical distance between the roof or ceiling sprinklers and the top of the storage) are all significant variables contributing to the effectiveness and required design density of sprinkler protection.

7.2.3 Intermediate level in-rack sprinklers

7.2.3.1 Where more than 50 intermediate level sprinklers are installed in the racks, they shall not be fed from the same control valve set as the roof or ceiling sprinklers. The control valve set shall be not less than 100 mm diameter.

7.2.3.2 The design density for the roof or ceiling sprinklers shall be a minimum of 7,5 mm/min over an area of operation of 260 m². If goods are stored above the highest level of intermediate protection, the design criteria for the roof or ceiling sprinklers shall be taken from Table 5.

7.2.3.3 For the purposes of hydraulic calculation it shall be assumed that 3 sprinklers are operating simultaneously at the most hydraulically remote position on each level of in-rack sprinklers, up to a maximum of three levels. Where rack aisles are 2,4 m or more in width only one rack need be assumed to be involved. Where rack aisles are less than 2,4 m but greater than or equal to 1,2 m in width, two racks shall be assumed to be involved. Where rack aisles are less than 1,2 m in width, three racks shall be assumed to be involved.

NOTE It is not necessary to assume simultaneous operation of more than three rows of sprinklers in the vertical plane nor more than three rows of sprinklers in the horizontal plane.

7.2.3.4 In-rack sprinklers and the associated ceiling sprinklers shall always be fully calculated (see 13.1.1).

NOTE The minimum pressure at any operating sprinkler is 2,0 bar (see 13.4.4).

Table 4 — Design criteria for HHS with roof or ceiling protection only

A2

Storage configuration	Maximum permitted storage height (see NOTE 1) m				Design density mm/min	Area of operation (wet or pre-action system (see NOTE 2) m²
	Category I	Category II	Category III	Category IV		
ST1 Free standing or block stacking	5,3 6,5 7,6	4,1 5,0 5,9 6,7 7,5	2,9 3,5 4,1 4,7 5,2	1,6 2,0 2,3 2,7 3,0	7,5 10,0 12,5 15,0 17,5	260
			5,7 6,3 6,7 7,2	3,3 3,6 3,8 4,1 4,4	20,0 22,5 25,0 27,5 30,0	300
ST2 Post pallets in single rows ST4 Palletized racks	4,7 5,7 6,8	3,4 4,2 5,0 5,6 6,0	2,2 2,6 3,2 3,7 4,1	1,6 2,0 2,3 2,7 3,0	7,5 10,0 12,5 15,0 17,5	260
			4,4 4,8 5,3 5,6 6,0	3,3 3,6 3,8 4,1 4,4	20,0 22,5 25,0 27,5 30,0	300
ST3 Post pallets in multiple rows ST5 and ST6 Solid or slatted shelves	4,7 5,7	3,4 4,2 5,0	2,2 2,6 3,2	1,6 2,0 2,3 2,7 3,0	7,5 10,0 12,5 15,0 17,5	260

NOTE 1 The vertical distance from the floor to the sprinkler deflectors, minus 1 m, or the highest value shown in the table, whichever is the lower.

NOTE 2 Dry and alternate systems should be avoided on High Hazard storage especially with the more combustible products (the higher categories) and the higher storage. Should it nonetheless be necessary to install a dry or alternate system, the area of operation should be increased by 25 %.

A2

TB229.3.2

TB229.3.3

Table 5 — Design criteria for roof or ceiling sprinklers with in-rack sprinklers

Storage Configuration	Maximum permitted storage height above the top level of in-rack protection (see NOTE 1) m				Design density mm/min	Area of operation (wet or pre-action system (see NOTE 2)) m²
	Category I	Category II	Category III	Category IV		
ST4 Palletized racks	3,5	[A1⟩ 3,4 ⟨A1]	2,2 2,6 3,2 3,5	1,6 2,0 2,3 2,7	7,5 10,0 12,5 15,0	260
ST5 and ST6 Solid or slatted shelves	3,5	[A1⟩ 3,4 ⟨A1]	2,2 2,6 3,2	1,6 2,0 2,3 2,7	7,5 10,0 12,5 15,0	260

NOTE 1 The vertical distance from the highest level of in-rack sprinklers to the top of the storage.

NOTE 2 Dry and alternate systems should be avoided on High Hazard storage especially with the more combustible products (the higher categories) and the higher storage. If it is, nonetheless, necessary to install a dry or alternate system, the area of operation should be increased by 25%.

7.3 Pressure and flow requirements for pre-calculated systems

7.3.1 LH and OH systems

The water supply shall be capable of providing not less than the appropriate flows and pressures specified in Table 6 at each control valve set. The pressure loss due to friction and static head between the water supply and each control valve set shall be calculated separately.

Table 6 — Pressure and flow requirements for pre-calculated LH and OH systems

Hazard Class	Flow l/min	Pressure at the control valve set bar	Maximum demand flow l/min	Pressure at the control valve set bar
LH (Wet and pre-action)	225	$2,2+p_s$	-	-
OH1 Wet and pre-action	375	$1,0+p_s$	540	$0,7+p_s$
OH1 Dry and alternate OH2 Wet and pre-action	725	$1,4+p_s$	1 000	$1.0+p_s$
OH2 Dry and alternate OH3 Wet and pre-action	1 100	$1,7+p_s$	1 350	$1,4+p_s$
OH3 Dry and alternate OH4 Wet and pre-action	1 800	$2,0+p_s$	2 100	$1,5+p_s$

NOTE p_s is the static head loss due to the height of the highest sprinkler in the array concerned above the control valve set 'C' gauge, in bar.

7.3.2 HHP and HHS systems without in-rack sprinklers

7.3.2.1 The water supply shall be capable of delivering at the highest design point not less than the appropriate flow and pressure specified in Table 7, or as modified in 7.3.2.2 to 7.3.2.5. The total requirement for the running pressure at the control valve set shall be the sum of the pressure at the design point, the pressure equivalent of the difference in height between the control valve set and the highest sprinkler downstream of the design point and the pressure loss for the flow in the piping from the control valve set to the design point.

Table 7 — Pressure and flow requirements for pre-calculated installations designed using Tables 32 to 35

Design Density mm/min	Maximum demand flow l/min		Pressure at the highest design point (p_d) bar			
			Area of operation per sprinkler m²			
	Wet or pre-action	Dry or alternate	6	7	8	9
(1) With pipe diameters in accordance with Tables 32 & 33 and sprinklers having a K factor of 80						
7,5	2 300	2 900	-	-	1,80	2,25
10,0	3 050	3 800	1,80	2,40	3,15	3,90
(2) With pipe diameters in accordance with Tables 32 & 34 and sprinklers having a K factor of 80						
7,5	2 300	2 900	-	-	1,35	1,75
10,0	3 050	3 800	1,30	1,80	2,35	3,00
(3) With pipe diameters in accordance with Tables 35 & 34 and sprinklers having a K factor of 80						
7,5	2 300	2 900	-	-	0,70	0,90
10,0	3 050	3 800	0,70	0,95	1,25	1,60
(4) With pipe diameters in accordance with Tables 35 & 34 and sprinklers having a K factor of 115						
10,0	3 050	3 800	-	-	-	0,95
12,5	3 800	4 800	-	0,90	1,15	1,45
15,0	4 550	5 700	0,95	1,25	1,65	2,10
17,5	4 850	6 000	1,25	1,70	2,25	2,80
20,0	6 400	8 000	1,65	2,25	2,95	3,70
22,5	7 200	9 000	2,05	2,85	3,70	4,70
25,0	8 000	10 000	2,55	3,50	4,55	5,75
27,5	8 800	11 000	3,05	4,20	5,50	6,90
30,0	9 650	12 000	3,60	4,95	6,50	-

NOTE If there are sprinklers in the array which are higher than the design point, the static head from the design point to the highest sprinklers should be added to p_d.

7.**3.2.2** Where the area of the HHP or HHS portion of an occupancy is less than the area of operation, the flow rate in Table 7 may be proportionately reduced, (see 7.3.2.6), but the pressure at the highest design point for the area shall be equal to that shown in the table, or be determined by hydraulic calculation.

7.**3.2.3** When the HHP or HHS portion of an occupancy involves less than 48 sprinklers, the flow rate and appropriate pressure shown in Table 7 shall be available at the level of the highest sprinklers at the point of entry to the HHP or HHS area of sprinklers.

7.3.2.4 Where the area of operation is greater than the area of HHP or HHS protection and this area is adjacent to the OH protection, the total flow rate shall be calculated as the sum of the HHP or HHS portion when reduced proportionately as in 7.3.2.2 plus the flow rate for the OH section calculated on the basis of a design density of 5 mm/min. The pressure at the design point of the highest sprinklers in the HHP or HHS portion of the risk shall be either that shown in Table 7, or be determined by hydraulic calculation.

NOTE If the OH portion is upstream of the HH area, the hydraulic gradient will mean that the greater flow to the OH portion will be taken than for purely OH systems. Therefore, in a fire involving the complete design area the HH portion will have a reduced flow rate.

7.3.2.5 When the area of operation is fed by more than one distribution pipe, the pressure at the level of the highest sprinklers of the design points shall either be as shown in Table 7 for the appropriate design density, or be determined by hydraulic calculation. The flow rate for each distribution pipe shall be determined proportionately (see 7.3.2.6).

7.3.2.6 Where the basic area of operation for a given design density is increased or decreased as described in 7.3.2.2 to 7.3.2.7, the flow rate shall be proportionately increased or decreased, (see 7.3.2.7), but the pressure at the design point shall remain unchanged.

7.3.2.7 The increased or decreased flow rates shall be determined proportionately as follows:

$$Q_2 = Q_1 \, x \, \frac{a_2}{a_1}$$

where:

Q_2 is the flow rate required or in the case of the circumstances described in 7.3.2.2 to 7.3.2.5 the flow rate in each distribution pipe, in litres per minute;

Q_1 is the flow rate required as given in Table 7, in litres per minute;

a_1 is the area of operation for design density, in square metres (see Table 4);

a_2 is the area of operation required, or in the case of the circumstances described in 7.3.2.2 to 7.3.2.5 the area served by each distribution pipe, in square metres.

8 Water supplies

8.1 General

8.1.1 Duration

Water supplies shall be capable of automatically furnishing at least the required pressure/flow conditions of the system. If the water supply is used for other fire fighting systems, see 9.6.4, except as specified in the case of pressure tanks, each water supply shall have sufficient capacity for the following minimum durations:

TB223 (for EPEC)

— LH 30 min

— OH 60 min

— HHP 90 min

— HHS 90 min

NOTE In the case of town mains, inexhaustible sources and all pre-calculated systems, the duration is implicit in the requirements given in this standard.

8.1.2 Continuity

A water supply shall not be liable to be affected by possible frost conditions or drought or flooding or any other conditions that could reduce the flow or effective capacity or render the supply inoperative.

All practical steps shall be taken to ensure the continuity and reliability of water supplies.

NOTE Water supplies should preferably be under the control of the user, or else the reliability and right of use should be guaranteed by the organization having control.

The water shall be free from fibrous or other matter in suspension liable to cause accumulations in the system piping. Salt or brackish water shall not be retained in sprinkler installation pipework.

Where there is no suitable fresh water source available, a salt or brackish water supply may be used provided the installation is normally charged with fresh water.

8.1.3 Frost protection

The feed pipe and the control valve set shall be maintained at a minimum temperature of 4°C.

8.2 Maximum water pressure

8.2.1 Except during testing, water pressure shall not exceed 12 bar at equipment connections or locations identified in 8.2.1.1 and 8.2.1.2. The pressure in pumped systems shall take into account any increase in driver speed and pressure due to closed valve condition.

8.2.1.1 All types of sprinklers system

a) sprinklers;

b) multiple jet controls;

c) water flow detectors;

d) dry pipe and pre-action alarm valves;

e) accelerators and exhausters;

f) water motor alarms;

g) zone control valves.

8.2.1.2 Sprinkler systems where the height difference between the highest and lowest sprinkler heads does not exceed 45m

a) pump outlets, taking into account any increases in driver speed under closed valve conditions;

b) wet alarm valves;

c) stop valves;

d) mechanical pipe joints

8.2.2 In high rise sprinkler systems, where the height difference between the highest and lowest sprinkler exceeds 45 m, water pressures may exceed 12 bar at the following locations (providing all equipment subject to pressures greater than 12 bar is fit for the purpose):

a) pump outlets;

b) riser and distribution pipes.

8.3 Connections for other services

Water for other services may be taken from a sprinkler system only when all the following conditions are met:

a) the connections shall be as specified in Table 8;

b) the connections shall be made through a stop valve fitted upstream of the control valve set(s), as close as is practical to the point of connection to the sprinkler system supply pipe;

c) the sprinkler system shall not be a high rise system;

d) the sprinkler system shall not be protecting a multi-storey building.

The sprinkler system pumps shall be separate from any hydrant system pumps unless a combined water supply in accordance with 9.6.4 is used.

Table 8 — Connections for water for other services in low rise systems

Water supply type	Acceptable number, size and purpose of connection(s)
Town main. Main and supply pipe greater than or equal to 100 mm	one, no more than 25 mm diameter, for non-industrial use
Town main. Main and supply greater than or equal to 150 mm	one, no more than 40 mm diameter, for non-industrial use or: one, no more than 50 mm diameter, for fire hose reels, to which may be made a further connection (close to the first connection, and fitted with a stop valve close to the feed end), no more than 40 mm, for non-industrial use.
Elevated private reservoir, gravity tank or automatic pump	one, no more than 50 mm diameter, for fire hose reels.

NOTE An additional feed arrangement with check valve can be provided for the fire brigade.

8.4 Housing of equipment for water supplies

Water supply equipment, such as pumps, pressure tanks and gravity tanks, shall not be housed in buildings or sections of premises in which there are hazardous processes or explosion hazards. The water supplies, stop valves and control valve sets shall be installed such that they are safely accessible even in a fire situation. All components of the water supplies and control valve sets shall be installed such that they are secured against tampering and are adequately protected against freezing.

8.5 Test facility devices

Sprinkler installations shall be permanently provided with devices for measuring pressure and flow for checking compliance with clauses 7.3 and 10.

8.5.1 At control valve sets

[A2] A flow measuring facility shall be installed at each control valve set except in the following cases: [A2]

a) where two or more control valve sets are installed together, the device need be installed only at the hydraulically most remote set, or, when the installations belong to different hazard classes, at the control valve set which requires the highest water flow;

b) where the water supply is by an automatic pump or pumps, the flow measuring device may be installed at the pumphouse.

[A2] If the flow measuring device is not permanently fitted, it shall be available on site at all times. [A2]

In all cases, the appropriate allowance shall be made for the pressure losses between the water source and the control valve set(s) using the calculation methods specified in 13.2.

Facilities shall be provided for the disposal of test water.

Dry or alternate control valve sets (main or subsidiary) may have an additional flow test valve arrangement of unspecified flow loss characteristic fitted below the control valve set, downstream of the main stop valve, to facilitate informal supply pressure testing. Such flow test valves and pipework shall have a nominal diameter of 40 mm for LH installations and of 50 mm for other installations.

8.5.2 At water supplies

TB229.3.4

[A2] At least one suitable flow and pressure measuring facility shall be permanently installed and shall be capable of checking each water supply. [A2]

The testing apparatus shall be of adequate capacity and shall be installed in accordance with the supplier's instructions. The apparatus shall be installed in a frost-proof area.

[A2] If the testing apparatus is not permanently fitted, it shall be available on site at all times. [A2]

8.6 Water Supply test

8.6.1 General

The test facility specified in 8.5.2 shall be used. Each supply to the installation shall be tested independently with all other supplies isolated.

For both pre-calculated and fully calculated installations, the water supply shall be tested at least at the installation maximum demand flow.

8.6.2 Storage tank and pressure tank supplies

The stop valves controlling the flow from the water supply to the installation shall be fully opened. Automatic pump starting shall be checked by fully opening the installation drain and test valve. [A2] The flow shall be verified in accordance with Clause 7. The supply pressure measured on the 'C' gauge shall be verified as being at least the appropriate value specified in Clause 7. [A2]

8.6.3 Town main, booster pump, elevated private reservoir and gravity tank supplies

The stop valves controlling the flow from the supply to the installation shall be fully opened. Automatic pump starting shall be checked by fully opening the installation drain and test valve. The drain and test valve shall be adjusted to give the flow specified in clause 7. When the flow is steady the supply pressure measured on the 'C' gauge shall be verified as being at least the appropriate value specified in clause 7.

9 Type of water supply

9.1 General

TB218

Water supplies shall be one or more of the following:

a) Town mains in accordance with 9.2;

b) Storage tanks in accordance with 9.3;

c) Inexhaustible sources in accordance with 9.4;

d) Pressure tanks in accordance with 9.5.

9.2 Town mains

9.2.1 General

A pressure switch shall be installed and shall operate an alarm when the pressure in the supply drops to a predetermined value. The switch shall be positioned upstream of any non-return valve and shall be equipped with a test valve (see annex I).

NOTE 1 In some cases the water quality makes it necessary to fit strainers on all connections from town mains.

A1 NOTE 2 It can be necessary to take into account extra flow required for fire brigade purposes. A1

NOTE 3 The agreement of the water authority will usually be needed for town main connections.

9.2.2 Boosted mains

If booster pumps are used, they shall be installed in accordance with the requirements of clause 10.

NOTE The agreement of the water authority will normally be needed for a booster pump to be connected to a town main.

Where a single pump is installed, a by-pass connection shall be provided with at least the same dimension as the water supply connection to the pump and be fitted with a non-return valve and two stop valves. The pump or pumps shall be reserved solely for fire protection.

TB201
TB224
TB226

9.3 Storage tanks

9.3.1 General

Storage tanks shall be one or more of the following:

— pump suction tank;

— gravity tank;

— reservoir.

9.3.2 Water volume

TB224
TB226

9.3.2.1 General

For each system a minimum water volume is specified. This shall be supplied from one of the following:

— a full capacity tank, with an effective capacity at least equal to the specified water capacity;

— a reduced capacity tank (see 9.3.4), where the required water volume is supplied jointly by the effective capacity of the tank plus the automatic infill.

The effective capacity of a tank shall be calculated by taking the difference between the normal water level and the lowest effective water level. If the tank is not frost proof the normal water level shall be increased by at least 1,0 m and ice venting shall be provided. In the case of enclosed tanks, easy access shall be provided.

Except for open reservoirs, tanks shall be provided with an externally readable water level indicator.

9.3.2.2 Pre-calculated systems

Table 9 shall be used to determine the minimum effective volume of water required for LH and OH pre-calculated systems. The volumes of water indicated shall be reserved solely for the use of the sprinkler system.

Table 9 — Minimum water volume for pre-calculated LH and OH systems

Group	Height *h* of the highest sprinkler above the lowest sprinkler [A1] (see NOTE) [A1] m	Minimum water volume m^3
LH - (Wet or pre-action)	$h \leq 15$ $15 < h \leq 30$ $30 < h \leq 45$	9 10 11
OH1 - Wet or pre-action	$h \leq 15$ $15 < h \leq 30$ $30 < h \leq 45$	55 70 80
OH1 - Dry or alternate OH2 - Wet or pre-action	$h \leq 15$ $15 < h \leq 30$ $30 < h \leq 45$	105 125 140
OH2 - Dry or alternate OH3 - Wet or pre-action	$h \leq 15$ $15 < h \leq 30$ $30 < h \leq 45$	135 160 185
OH3 - Dry or alternate OH4 - Wet or pre-action	$h \leq 15$ $15 < h \leq 30$ $30 < h \leq 45$	160 185 200
OH4 - Dry or alternate	Use HH protection	

[A1] NOTE [A1] Excluding sprinklers in the sprinkler valve room.

Table 10 specifies the minimum volume of water required for pre-calculated HHP or HHS systems. The water volume indicated shall be reserved solely for the use of the sprinkler system.

TB224
TB226

TB224
TB226

Table 10 — Minimum water volume for pre-calculated HHP and HHS systems

Design density not exceeding mm/min	Minimum water volume m^3	
	Wet systems	Dry systems
7,5	225	280
10,0	275	345
12,5	350	440
15,0	425	530
17,5	450	560
20,0	575	720
22,5	650	815
25,0	725	905
27,5	800	1000
30,0	875	1090

9.3.2.3 Calculated systems

The minimum effective water volume shall be calculated by multiplying the maximum demand flow by the duration specified in 8.1.1.

9.3.3 Refill rates for full capacity tanks

The water source shall be capable of refilling the tank in no more than 36 h.

The outlet of any feed pipe shall be not less than 2,0 m horizontally from the suction pipe inlet.

9.3.4 Reduced capacity tanks

The following conditions shall be met for reduced capacity tanks:

TB224
TB226

a) the inflow shall be from a town main and shall be automatic, via at least two mechanical float valves. The inflow shall not adversely influence the pump suction [A2]. The failure of a single float valve shall not impair the required infill rate [A2];

TB224
TB226

b) the effective capacity of the tank shall be no less than that shown in Table 11;

c) the tank capacity plus the inflow shall be sufficient to supply the system at full capacity as specified in 9.3.2;

d) it shall be possible to check the capacity of the inflow;

e) the inflow arrangement shall be accessible for inspection.

[A1] Table 11 — Minimum effective capacity of reduced capacity tanks [A1]

Hazard Class	[A1] Minimum effective capacity [A1] m^3
LH - (Wet or pre-action)	5
OH1 - Wet or pre-action	10
OH1 - Dry or alternate OH2 - Wet or pre-action	20
OH2 - Dry or alternate OH3 - Wet or pre-action	30
OH3 - Dry or alternate OH4 - Wet or pre-action	50
HHP and HHS	70, but in no case less than 10% of the full capacity

TB224
TB229.3.5

9.3.5 Effective capacity of tanks and dimensions of suction chambers

TB224
TB226

The effective capacity of storage tanks shall be calculated as shown in Figure 4, where:

N is the normal water level;

X is the low water level;

d is the [A1] nominal diameter [A1] of the suction pipe.

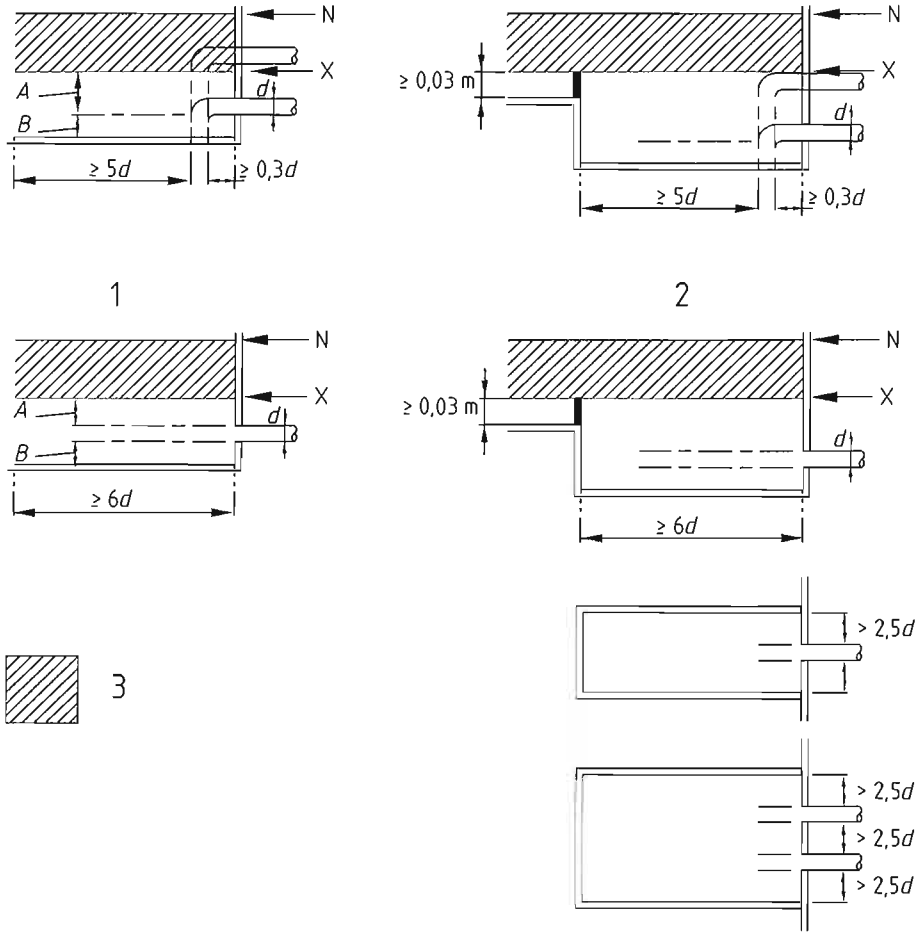

Key

1 Without sump

2 With sump

3 Effective capacity

A Minimum dimension from the suction pipe to the low minimum dimensions water level

B Minimum dimension from the suction pipe to the bottom of the sump

Figure 4 — Effective capacity of suction tanks and dimensions of suction chambers

Table 12 specifies minimum dimensions for the following:

A from the suction pipe to the low water level, (see Figure 4);

B from the suction pipe to the bottom of the sump, (see Figure 4).

If a vortex inhibitor is installed with the minimum dimensions specified in Table 12, dimension *A* may be reduced to 0,10 m.

A tank may be provided with a sump in order to maximize the effective capacity (See figure 4).

Table 12 — Suction pipe inlet clearances

Nominal diameter of suction pipe *d* mm	*A* minimum m	*B* minimum m	Minimum dimension of vortex inhibitor m
65	0,25	0,08	0,20
80	0,31	0,08	0,20
100	0,37	0,10	0,40
150	0,50	0,10	0,60
200	0,62	0,15	0,80
250	0,75	0,20	1,00
300	0,90	0,20	1,20
400	1,05	0,30	1,20
500	1,20	0,35	1,20

TB224
TB224.8
TB226

9.3.6 Strainers

In the case of pumps under suction lift conditions, a strainer shall be fitted upstream of the foot valve on the pump suction pipe. It shall be fitted so that it can be cleaned without the tank having to be emptied.

In the case of open tanks feeding pumps under positive head conditions, a strainer shall be fitted to the suction pipe outside the tank. A stop valve shall be installed between the tank and the strainer.

Strainers shall have a cross-sectional area of at least 1,5 times the nominal area of the pipe and shall not allow objects greater than 5 mm diameter to pass.

TB224
TB226

9.4 Inexhaustible sources - Settling and suction chambers

9.4.1 Where a suction or other pipe draws from a settling or suction chamber fed from an inexhaustible source, the design and dimensions in Figure 5 shall apply, where D is the diameter of the suction pipe, d is the diameter of the inlet pipe and d^1 is the water depth at the weir. Pipes, conduits and the bed of open-topped channels shall have a continuous slope towards the settling or suction chamber of at least 1:125. The diameter of feed pipes or conduit shall not be less than as given in Table 13. The suction chamber dimensions shall be as specified in 9.3.5.

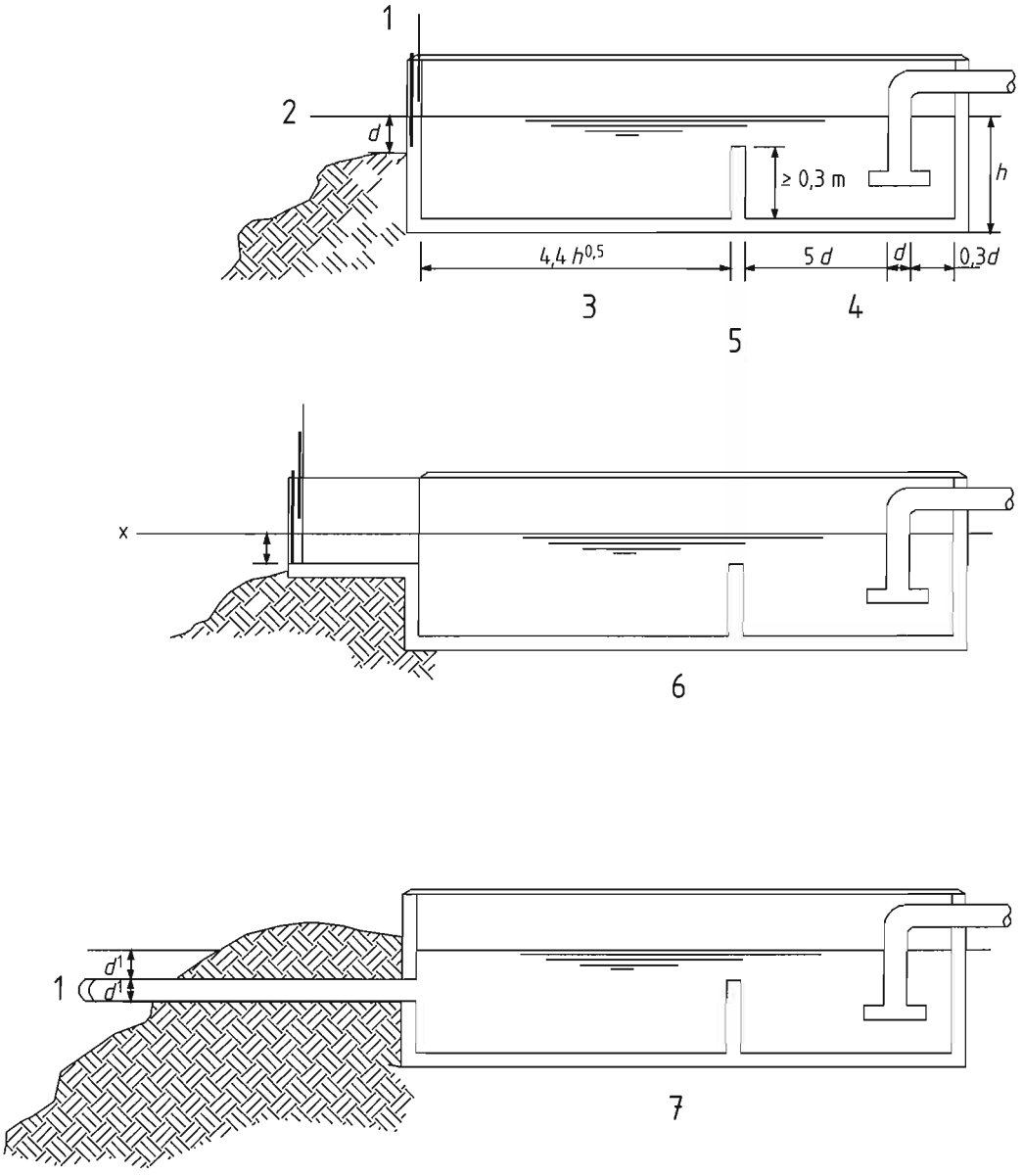

Key

1 Strainers
2 Lowest known water level 'X'
3 Settling chamber
4 Suction chambers
5 Weir feed
6 Open channel feed
7 Conduit or pipe feed

Figure 5 — Settling and suction chambers

Table 13 — Nominal diameter of feed pipes or conduits for settling and suction chambers

Nominal diameter of feed pipes, or minimum dimension of conduits (d^1) mm	Maximum flow of pump (Q) l/min
200	500
250	940
300	1 570
350	2 410
400	3 510
500	6 550
600	10 900
NOTE For dimensions not included in the table, the following equation should be used: $d^1 \geq 21{,}68\ Q^{0{,}357}$	

In the case of flowing water the angle between the flow direction and the intake axis (seen in the direction of flow) shall be less than 60°.

9.4.2 The inlet to pipes or conduit shall be submerged at least one nominal pipe diameter below the lowest known water level. The total depth of open channels and weirs shall accommodate the highest known water level of the water source.

The dimension of the suction chamber and the location of suction pipes from the walls of the chamber, the submergence below the lowest known water level (making any necessary allowances for ice) and clearance from the bottom shall conform to 9.3.5 and Figures 4 and 5.

The settling chamber shall have the same width and depth as the suction chamber and a length of at least 10*d* where *d* is the minimum bore of the pipe or conduit, and no less than 1,5 m.

The system shall be designed such that the mean water velocity does not exceed 0,2 m/s at any point between the inlet to the settling chamber and the pump suction pipe inlet.

9.4.3 The settling chamber, including any screening arrangement, shall be arranged to prevent ingress of wind borne debris and of sunlight.

9.4.4 Before entering the settling chamber the water shall first pass through a removable screen of wire mesh or perforated metal plate having an aggregate clear area below the water level of [A1] 150 mm² [A1] for each l/min of pump nominal flow in the case of LH or OH or maximum design flow for HHP or HHS.

The screen shall be strong enough to withstand the weight of water should it become obstructed and shall have a mesh not greater than 12,5 mm. Two screens shall be provided, with one in use and the other in a raised position ready for interchange when cleaning is necessary.

9.4.5 The inlet to the pipe or conduit feeding the settling chamber or suction pit shall be provided with a strainer having an aggregate clear area of at least five times the cross sectional area of the pipe or conduit. The individual openings shall be of such a size as to prevent the passage of a 25 mm diameter sphere.

9.4.6 Where the suction inlet draws from a walled off area of the bed of a river, canal, lake etc., the wall itself shall be extended above the water surface with an aperture screening arrangement. Alternatively, the space between the top of the wall and the water surface shall be enclosed with a screen. Screens shall be as specified in 9.4.4.

9.4.7 Excavation of the bed of the lake etc., to create the necessary depth for a pump suction inlet is not recommended, but if unavoidable the area shall be enclosed with the largest screen practicable, but in any case having sufficient clear area as specified in 9.4.4.

9.4.8 Duplicate supplies shall be provided with separate suction and settling chambers.

9.5 Pressure tanks

9.5.1 General

[A2] The pressure tank shall be reserved for the sprinkler system and/or the water spray system. [A2]

The pressure tank shall be accessible for external and internal inspection. It shall be protected against corrosion both internally and externally.

The discharge pipe shall be situated at least 0,05 m above the bottom of the tank.

9.5.2 Housing

The pressure tank shall be housed in a readily accessible position in either:

a) a sprinkler protected building;

b) a separate sprinkler protected building of Euroclass A1 or A2 or an equivalent in existing national classification systems construction used solely for the housing of fire protection water supplies and equipment;

c) an unprotected building situated in a 60 min fire resistant compartment with no combustible materials.

When the pressure tank is housed in a sprinkler protected building the area shall be enclosed by fire resistant construction of no less than 30 min.

The pressure tank and housing shall be maintained at a temperature of at least 4°C.

9.5.3 Minimum capacity (water)

The minimum volume of water in a pressure tank for a single supply shall be 15 m^3 for LH and 23 m^3 for OH1.

The minimum volume of water in a pressure tank for duplicate supplies shall be 15 m^3 in LH and OH (all groups).

9.5.4 Air pressure and contents

9.5.4.1 General

The air space shall not be less than one third of the pressure tank volume.

Pressure in the tank shall not exceed 12 bar.

The air pressures and water flow rates from the tank shall be sufficient to satisfy the sprinkler installation demand requirements, up to the point of exhaustion.

9.5.4.2 Calculation

The air pressure to be maintained in the tank shall be determined from the following formula:

$$p = (p_1 + p_2 + 0,1h) x \frac{V_t}{V_a} p_1$$

where:

p is the gauge pressure, in bar;

p_1 is atmospheric pressure, in bar (assume p_1 = 1);

p_2 is the minimum pressure required at the highest sprinkler at pressure tank exhaustion, in bar;

h is the height of the highest sprinkler, or of the hydraulically most remote sprinkler, above the bottom of the pressure tank (i.e. negative if the highest sprinkler is below the tank), in metres;

V_t is the total volume of the tank, in cubic metres;

V_a is the volume of air in the tank, in cubic metres.

For pre-calculated systems [A1] p_2 [A1] shall be taken from Table 6, plus any friction losses between the control valve set and pressure tank or between the design point and pressure tank.

9.5.5 Charging with air and water

Pressure tanks used as a single supply shall be provided with means for automatically maintaining the air pressure and water level. The air and water supplies shall be capable of filling and pressurizing the tank completely in no more than 8 h.

The water supply shall be capable of topping up with water at the gauge pressure (p in 9.5.4) of the pressure tank with a flow of at least 6 m^3/h.

9.5.6 Control and safety equipment

9.5.6.1 The tank shall be fitted with a pressure gauge and the correct gauge pressure p shall be marked on the gauge.

The tank shall be fitted with suitable safety devices to ensure that the highest permitted pressure is not exceeded.

9.5.6.2 A gauge glass shall be fitted to indicate the water level. Stop valves shall be fitted at each end of the gauge glass and they shall normally be kept closed and a drain valve shall also be provided.

The gauge glass shall be protected against mechanical damage and shall be marked with the correct water level.

9.5.6.3 An automatic warning system shall be provided to indicate failure of devices to restore either the correct air pressure or water level. Alarms shall be given visually and audibly at the installation control valve or a permanently manned location.

9.6 Choice of water supply

9.6.1 Single water supplies

TB204
TB224
TB226

The following constitute acceptable single water supplies:

a) a town main;

b) a town main with one or more booster pumps;

c) a pressure tank (LH and OH1 only);

d) a gravity tank;

e) a storage tank with one or more pumps;

f) an inexhaustible source with one or more pumps.

9.6.2 [A1] Superior single water supplies [A1]

TB204
TB218.F1
TB218.F2
TB226

Superiorsingle water supplies are single water supplies which provide a higher degree of reliability. They include the following:

a) a town main fed from both ends, fulfilling the following conditions:

[A2]

— each end shall be capable of satisfying the flow demands of the system; [A2]

— it shall be fed from two or more water sources;

— it shall be independent at any point on a single, common trunk main;

[A2]

— if only one end gives the required pressure, a single booster pump shall be installed. If both ends cannot give the required pressure, two or more booster pumps shall be installed. [A2]

b) a gravity tank with no booster pump, or storage tank with two or more pumps, where the tank fulfils the following conditions:

— the tank shall be full capacity;

— there shall be no entry for light or foreign matter;

[A2]

— suitable clean (see 8.1.2) water shall be used; [A2]

— the tank shall be painted or given other corrosion protection which reduces the need for emptying the tank for maintenance to periods of no less than 10 years.

c) an inexhaustible source with two or more pumps.

9.6.3 Duplicate water supplies

TB204
TB218.F3
TB218.F4
TB218.F5
TB218.F6
TB224
TB226

Duplicate water supplies shall consist of two single water supplies where each supply is independent of the other. Each of the supplies forming part of a duplicate supply shall conform to the pressure and flow characteristics given in clause 7.

Any combination of single supplies (including superior single supplies) may be used, with the following limitations:

a) no more than one pressure tank shall be used for OH-systems;

b) one storage tank of the reduced capacity type may be used (see 9.3.4).

9.6.4 Combined water supplies

TB224
TB226
TB229.3.6

Combined water supplies shall be superior single or duplicate water supplies designed to supply more than one fixed fire fighting system, as for example in the case of combined hydrant, hose and sprinkler installations.

NOTE Some countries may not allow sprinkler systems to be fed from a combined supply.

Combined supplies shall fulfil the following conditions:

a) the systems shall be fully calculated;

b) the supply shall be capable of supplying the sum of the simultaneous maximum calculated flows from each system. The flows shall be corrected up to the pressure required by the most demanding system;

c) the duration of the supply shall be no less than that required for the most demanding system;

d) duplicate pipe connections shall be installed between the water supplies and the systems.

9.7 Isolation of water supply

The connections between the water sources and sprinkler control valve sets shall be arranged so as to ensure the following:

a) that servicing of main components such as strainers, pumpsets, non-return valves and water meters is facilitated;

b) that any problem occurring to one supply shall not impair the operation of any other source or supply;

c) that maintenance can be carried out on one supply without impairing the operation of any other source or supply.

10 Pumps

10.1 General

The pump shall have a stable H(Q) curve, i.e. one in which the maximum head and shut-off head are coincidental, and the total head declines continuously with increasing rate of flow (see EN 12723).

TB209.12.1 (for ESFR) TB210

Pumps shall be driven either by electric motors or diesel engines, capable of providing at least the power required to comply with the following:

a) for pumps with non-overloading power characteristic curves, the maximum power required at the peak of the power curve;

b) for pumps with rising power characteristic curves, the maximum power for any conditions of pump load, from zero flow to a flow corresponding to a pump NPSH required equal to 16m or maximum suction static head plus 11m, whichever is greater.

The coupling between the driver and the pump of horizontal pumpsets shall be of a type which ensures that either can be removed independently and in such a way that pump internals can be inspected or replaced without affecting suction or discharge piping. End suction pumps shall be of the "back pull-out" type. Pipes shall be supported independently of the pump.

10.2 Multiple pump arrangements

Pumps shall have compatible characteristic curves and be capable of operating in parallel at all possible flow rates.

Where two pumps are installed, each one shall be capable independently of providing the specified flows and pressures. Where three pumps are installed, each pump shall be capable of providing at least 50% of the specified flow at the specified pressure.

Where more than one pump is installed in a superior or duplicate water supply, no more than one shall be driven by an electric motor.

TB210

10.3 Compartments for pumpsets

10.3.1 General

Pumpsets shall be housed in a compartment having a fire resistance of no less than 60 min, used for no other purpose than fire protection. It shall be one of the following (in order of preference):

a) a separate building;

b) a building adjacent to a sprinkler protected building with direct access from outside;

c) a compartment within a sprinkler protected building with direct access from outside.

10.3.2 Sprinkler protection

Compartments for pumpsets shall be sprinkler protected. Where the pump compartment is separate, it may be impractical to provide sprinkler protection from the control valve sets in the premises. Sprinkler protection may be provided from the nearest accessible point on the downstream side of the outlet non-return valve of the pump via a subsidiary stop valve secured in the open position, together with a water flow detector in accordance with EN 12259-5, to provide visible and audible indication of the operation of the sprinklers. The alarm equipment shall be installed either at the control valves or at a responsibly manned location such as a gatehouse (see annex I).

A 15 mm nominal diameter drain and test valve shall be fitted downstream of the flow alarm to permit a practical test of the alarm system.

10.3.3 Temperature

The pump compartment shall be maintained at or above the following temperature:

— 4 °C for electric motor driven pumps;

— 10 °C for diesel engine driven pumps.

10.3.4 Ventilation

Pump compartments for diesel engine driven pumps shall be provided with adequate ventilation in accordance with the supplier's recommendations.

10.4 Maximum temperature of water supply

The water supply temperature shall not exceed 40 °C. Where submersible pumps are utilized, the water temperature shall not exceed 25 °C, unless the suitability of the motor has been proven for temperatures up to 40 °C, in accordance with prEN 12259-12.

10.5 Valves and accessories

[A2] A stop valve shall be fitted in the pump suction pipe unless the maximum water level is lower than the pump. A non-return valve and a stop valve shall be fitted in the delivery pipe of each pump. [A2]

[A2] In the case of booster pumps a by-pass shall be installed around the pumps with a non-return valve and two stop valves all of the same diameter as the trunk main. [A2]

[A2] Any taper pipe fitted to the pump outlet shall expand in the direction of flow at an angle not exceeding 20°. Valves on the delivery side shall be fitted after any taper pipe. [A2]

Means for venting all cavities of the pump casing shall be provided unless the pump is made self-venting by arrangement of its branches.

Arrangements shall be made to ensure a continuous flow of water through the pump sufficient to prevent overheating when it is operating against a closed valve. This flow shall be taken into account in the system hydraulic calculation and pump selection. The outlet shall be clearly visible and where there is more than one pump the outlets shall be separate.

Diesel engine cooling circuits usually use the same water. However, if additional water is used, it shall also be taken into account.

Tappings on the pumps for inlet and outlet pressure gauges shall be easily accessible.

TB210

10.6 Suction conditions

10.6.1 General

Wherever possible, horizontal centrifugal pumps shall be used, installed with a positive suction head. i.e. in accordance with the following:

— at least two thirds of the effective capacity of the suction tank shall be above the level of the pump centre line;

— the pump centre line shall be no more than 2 m above the low water level of the suction tank (level *X* in 9.3.5).

If this is not feasible, the pump may be installed under suction lift conditions or vertical turbine pumps may be used.

NOTE Suction lift and submersible pump arrangements should be avoided and only used when it is not practicable to arrange positive suction head.

10.6.2 Suction pipe

10.6.2.1 General

[A2] The pump suction shall be connected to a straight or taper pipe at least two diameters long. The taper pipe shall have a horizontal top side and a maximum included angle not exceeding 20°. [A2]

[A2] The suction piping, including all valves and fittings, shall be designed in such a way as to ensure that the available NPSH (calculated at the maximum anticipated water temperature) at the pump inlet exceeds the required NPSH by at least 1 m at the maximum pump flow as shown in Table 14. [A2]

Table 14 — Pump pressure and flow rating

A2

Pipework	Hazard Class	Rated pump flow	Pump inlet condition
Pre-calculated	LH/OH	Pressure and flow requirements from Table 6	For tanks, with water supply at low water level (see *X* in Figure 4).
	HH	Pressure and 1,4 × flow required from Table 7	For booster pumps, with minimum town main pressure.
Fully calculated	All	Maximum pressure and flow required for the most favourable area	

A2

Suction piping shall be laid either horizontal or with a continuous slight rise towards the pump to avoid the possibility of air locks forming in the pipe.

A foot valve shall be fitted where the centre line of the pump is above the low water level (see 9.3.5).

10.6.2.2 Positive head

In positive head conditions, the diameter of the suction pipe shall be no less than 65 mm. Furthermore, the diameter shall be such that a velocity of 1,8 m/s is not exceeded when the pump is operating at maximum demand flow.

Where more than one pump is provided, the suction pipes may only be inter-connected if they are fitted with stop valves to allow each pump to continue operating when the other is removed for maintenance. The connections shall be dimensioned as appropriate for the flow rate required.

10.6.2.3 Suction lift

In suction lift conditions, the diameter of the suction pipe shall be no less than 80 mm. Furthermore, the diameter shall be such that a velocity of 1,5 m/s is not exceeded when the pump is operating at maximum demand flow.

Where there is more than one pumpset installed, the suction pipes shall not be interconnected.

The height from the low water level (see 9.3.5) to the centre line of the pump shall not exceed 3,2 m.

The suction pipe shall be positioned in the tank or reservoir in accordance with Figure 4 and Table 12 or Figure 5 and Table 13, as appropriate. A foot valve shall be fitted at the lowest point on the suction pipe. Each pump shall have automatic priming arrangements in accordance with 10.6.2.4.

TB210

10.6.2.4 Pump priming

Each pump shall be fitted with a separate automatic priming arrangement.

The arrangement shall consist of a tank situated at a higher level than the pump and with a pipe connection sloping from the tank to the delivery side of the pump. A non-return valve shall be fitted to this connection. Figure 6 shows two examples.

The tank, the pump and the suction pipework shall be kept constantly full of water even where there is leakage from the foot valve referred to in 10.6.2.3. Should the water level in the tank fall to 2/3 of the normal level, the pump shall start.

10.6.2.5 [A2] Pressure maintenance pump

A pressure maintenance pump may be installed to avoid starting one of the main pumps unnecessarily or to maintain the system pressure above control valve sets in the case of water supplies such as town mains with fluctuating pressure.

NOTE Some water authorities may not allow pressure maintenance pumps on systems with town main connections.

The pressure maintenance pump shall be sized and arranged in such a way that it is not capable of providing enough flow and pressure for a single open sprinkler and thus of preventing the main pump(s) from starting.

In the case of pressure maintenance pumps installed with negative suction, the suction piping and fittings shall be independent of those of the main pump(s). [A2]

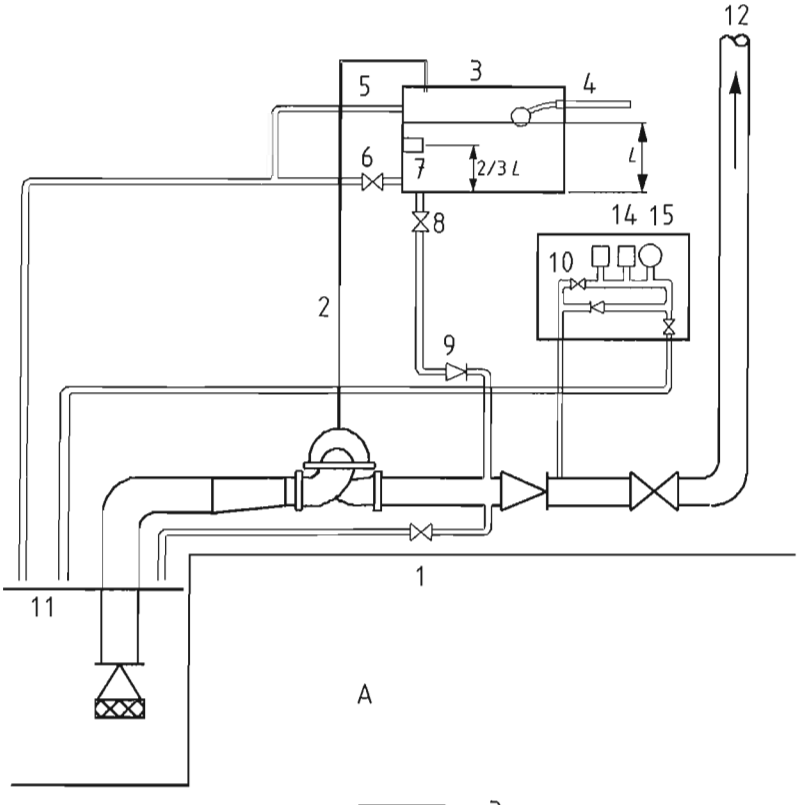

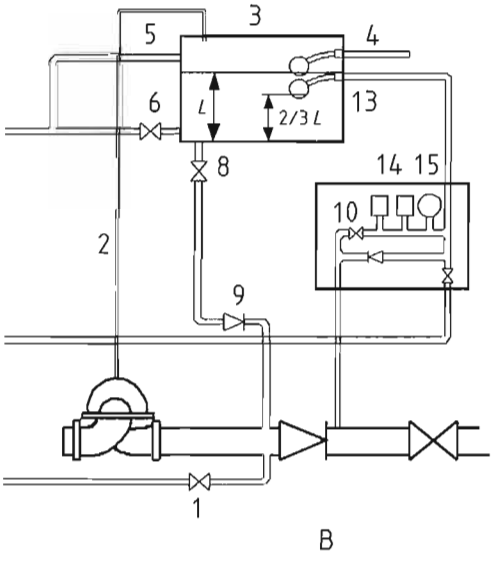

Key

1 Test drain and valve
2 Pump air bleed and min flow line
3 Pump priming tank
4 Inflow
5 Over flow
6 Drain valve
7 Low level switch for pump starting
8 Priming supply stop valve
9 Priming supply non-return valve
10 Pump start arrangement
11 Suction tank
12 Installation trunk main
13 Low level valve for pump starting
14 Pressure switches for pump starting
15 Pressure gauge

Figure 6 — Pump priming arrangement for suction lift

TB210

The size of the priming tank and the pipe shall be in accordance with Table 15

Table 15 — Pump priming tank capacity and pipe size

Hazard Class	Minimum tank capacity litres	Minimum diameter of priming pipe mm
LH	100	25
OH, HHP and HHS	500	50

10.7 Performance characteristics

10.7.1 Pre-calculated systems - LH and OH

Where the pumps take water from a storage tank, the characteristic of pre-calculated LH and OH systems shall conform to Table16.

Table 16 — Minimum pump characteristics for LH and OH (pre-calculated systems)

Hazard Class	Sprinkler height *h* above the control valve set(s) m	Nominal data		Characteristic			
		Pressure bar	Flow l/min	Pressure bar	Flow l/min	Pressure bar	Flow l/min
LH (Wet or pre-action)	$h \leq 15$	1,5	300	3,7	225	-	-
	$15 < h \leq 30$	1,8	340	5,2	225	-	-
	$30 < h \leq 45$	2,3	375	6,7	225	-	-
OH1 Wet or pre-action	$h \leq 15$	1,2	900	2,2	540	2,5	375
	$15 < h \leq 30$	1,9	1 150	3,7	540	4,0	375
	$30 < h \leq 45$	2,7	1 360	5,2	540	5,5	375
OH1 Dry or alternate OH2 Wet or pre-action	$h \leq 15$	1,4	1 750	2,5	1 000	2,9	725
	$15 < h \leq 30$	2,0	2 050	4,0	1 000	4,4	725
	$30 < h \leq 45$	2,6	2 350	5,5	1 000	5,9	725
OH2 Dry or alternate OH3 Wet or pre-action	$h \leq 15$	1,4	2 250	2,9	1 350	3,2	1 100
	$15 < h \leq 30$	2,0	2 700	4,4	1 350	4,7	1 100
	$30 < h \leq 45$	2,5	3 100	5,9	1 350	6,2	1 100
OH3 Dry or alternate OH4 Wet or pre-action	$h \leq 15$	1,9	2 650	3,0	2 100	3,5	1 800
	$15 < h \leq 30$	2,4	3 050	4,5	2 100	5,0	1 800
	$30 < h \leq 45$	3,0	3 350	6,0	2 100	6,5	1 800

NOTE 1 The pressures shown are as measured at the control valve set(s).
NOTE 2 In the case of buildings which exceed the heights shown, it should be proved that the pump characteristics are adequate for supplying the flows and pressures specified in 7.3.1.

TB210

10.7.2 Pre-calculated systems - HHP and HHS with no in-rack sprinklers

The nominal pump flow and pressure for HHP and HHS pre-calculated systems shall conform to 7.3.2. [A2] In addition the pump shall be capable of supplying 140 % of this flow at a pressure of no less than 70 % of the pressure at the design pump flow (see Figure 7). [A2]

10.7.3 Calculated systems

The rated duty of the pump shall be a function of the most unfavourable area curve. When measured by the supplier's test facility, the pump shall provide a pressure at least 0,5 bar higher than that required for the most unfavourable area. The pump shall also be capable of providing the flow and pressure of the most favourable area at all water supply water levels [A2] *deleted text* [A2].

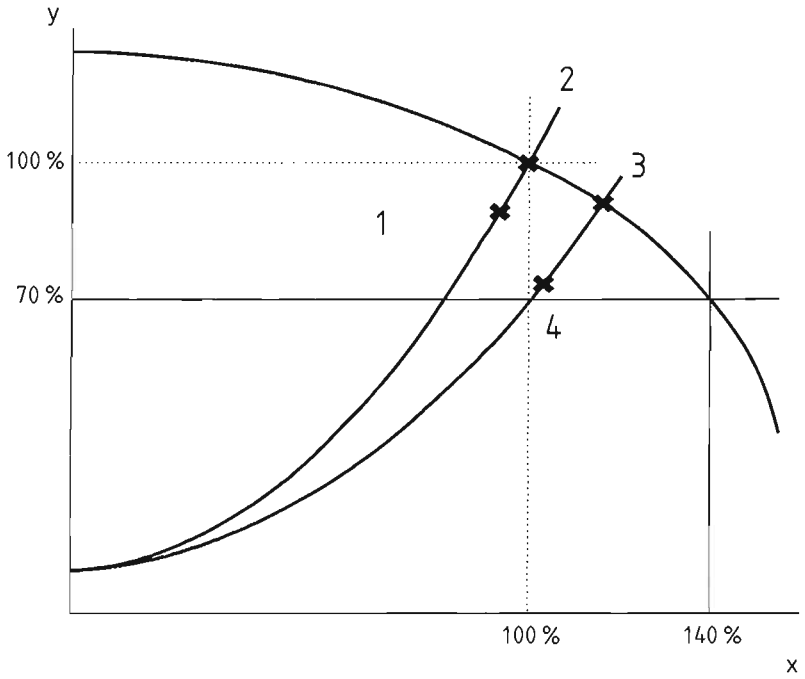

Key
1 Most unfavourable area
2 Design pump flow
3 Maximum demand flow
4 Most favourable area
x Flow
y Pressure

Figure 7 — Typical pump curve

10.7.4 Pressure and water capacity of boosted town mains

A test shall be carried out to show that the unboosted supply provides a flow rate equal to the maximum demand flow plus 20 %, at a pressure of at least 0,5 bar, as measured at the pump inlet. This test shall be carried out at a time of maximum demand on the main.

10.7.5 Pressure switches

10.7.5.1 Number of pressure switches

Two pressure switches shall be provided to start each pumpset. [A2] *deleted text* [A2] The pipe to the pressure switches shall be at least 15 mm. [A2] They shall be connected in such a way that either switch will start the pump. [A2]

10.7.5.2 Pump start

The first pumpset shall start automatically when the pressure in the trunk main falls to a value of no less than [A2] 0,8*p* [A2], where [A2] *p* [A2] is the pressure at the closed valve condition. Where two pumpsets are installed, the second pump shall start before the pressure falls to a value of no less than [A2] 0,6*p* [A2]. Once the pump has started, it shall continue to run until stopped manually.

10.7.5.3 Testing the pressure switches

Means shall be provided for testing pump starting with each pressure switch. If any isolating valve is installed on the connection between the trunk main and any pump starting pressure switch, a non-return valve shall be installed in parallel with the isolating valve so that a fall in pressure on the trunk main will be transmitted to the pressure switch even when the isolating valve is closed.

10.8 Electrically driven pumpsets

10.8.1 General

TB210

10.8.1.1 The electric supply system shall be available at all times.

10.8.1.2 Up to date documentation, such as installation drawings, main supply and transformer diagrams and connections for supplying the pump controller panel as well as motor, control alarm circuits and signals shall be kept available in the sprinkler valve or pump compartment.

10.8.2 Electricity supply

10.8.2.1 The supply to the pump controller shall be solely for use of the sprinkler pumpset and separate from all other connections. Where permitted by the electrical utility, the electrical supply to the pump controller shall be taken from the input side of the main switch on the incoming supply to the premises and where this is not permitted, by a connection from the main switch.

The fuses in the pump controller shall be of high rupturing capacity, capable of carrying the start current for a period of no less than 20 s.

10.8.2.2 All cables shall be protected against fire and mechanical damage.

To protect cables from direct exposure to fire they shall be run outside the building or through those parts of the building where the fire risk is negligible and which are separated from any significant fire risk by walls, partitions or floors with a fire resistance of no less than 60 min, or they shall be given additional direct protection or be buried. Cables shall be in single lengths, with no joins.

10.8.3 Main switchboard

10.8.3.1 The main switchboard for the premises shall be situated in a fire compartment used for no other purpose than for electrical power supplies.

The electrical connections in the main switchboard shall be such that the supply to the pump controller is not isolated when isolating other services.

10.8.3.2 Each switch on the dedicated power feed to the sprinkler pump shall be labelled:

SPRINKLER PUMP MOTOR SUPPLY - NOT TO BE SWITCHED OFF IN THE EVENT OF FIRE

The letters on the notice shall be at least 10 mm high and shall be white on a red background. The switch shall be locked to protect it against tampering.

10.8.4 Installation between the main switchboard and the pump controller

The current for calculating the correct dimension for the cable shall be determined by taking 150 % of the largest possible full load current.

10.8.5 Pump controller

10.8.5.1 The pump controller shall be able:

a) to start the motor automatically on receiving a signal from the pressure switches;

b) to start the motor on manual actuation;

c) to stop the motor by manual actuation only.

The controller shall be equipped with an ammeter.

In the case of submersible pumps a plate with its characteristics shall be affixed to the pump controller.

10.8.5.2 Except in the case of submersible pumps, the pump controller shall be situated in the same compartment as the electric motor and pump.

10.8.5.3 Contacts shall comply with utilization category [A2⟩ AC-3 ⟨A2] of EN 60947-1 and EN 60947-4.

10.8.6 Monitoring of pump operation

10.8.6.1 The following conditions shall be monitored (see annex I):

— power available to the motor and, where AC, on all three phases;

— pump on demand;

— pump running;

— start failure.

10.8.6.2 [A2⟩ All monitored conditions shall be visually indicated individually in the pump room. Pump running and a fault alarm shall also be audibly and visually indicated at location permanently attended by responsible personnel. ⟨A2]

10.8.6.3 The visual fault indication shall be yellow. The audible signals shall have a signal strength of at least 75 dB and shall be able to be silenced.

10.8.6.4 A lamp test for checking the signal lamps shall be provided.

TB210

10.9 Diesel engine driven pumpsets

10.9.1 General

The diesel engine shall be capable of operating continuously at full load at site elevation with a rated continuous power output in accordance with ISO 3046.

The pump shall be fully operational within 15 s of the beginning of any starting sequence.

Horizontal pumps shall have a direct drive.

The automatic start and operation of the pumpset shall not depend on any energy sources other than the engine and its batteries.

10.9.2 Engines

The engine shall be capable of starting at an engine room temperature of 5 °C.

It shall be provided with a governor to control the engine speed to ± 5% of its rated speed under normal load conditions, and be constructed so that any mechanical device fitted to the engine which could prevent the engine starting automatically, will return to the starting position.

10.9.3 Cooling system

The cooling systems shall be one of the following types:

TB210

a) Cooling by water from the sprinkler pump directly into the engine-cylinder jackets, via a pressure reducing device if necessary, in accordance with the supplier's specification. The outlet pipe shall be open so that the discharge water is visible;

b) A heat exchanger, where the water is taken from the sprinkler pump, via a pressure reducing device if necessary, in accordance with the supplier's specification. The outlet pipe shall be open so that the discharge water is visible. An auxiliary pump driven by the engine shall circulate the water in the closed circuit. If the auxiliary pump is belt driven, there shall be multiple belts such that even if up to half the belts are broken, the remaining belt(s) are able to drive the pump. The capacity of the closed circuit shall conform to the value specified by the engine supplier;

c) An air cooled radiator with a fan multiple belt driven from the engine. If half the belts should break, the remaining belts shall be capable of driving the fan. An auxiliary pump driven by the engine shall circulate the water in the closed circuit. If the auxiliary pump is belt driven, there shall be multiple belts such that even if half the belts are broken, the remaining belts are able to drive the pump. The capacity of the closed circuit shall conform to the value specified by the engine supplier;

d) Direct air cooling of the engine by means of a multiple belt driven fan. When half the belts are broken the remaining belts shall be capable of driving the fan.

10.9.4 Air filtration

The engine air intake shall be fitted with a suitable filter.

10.9.5 Exhaust system

The exhaust pipe shall be fitted with a suitable silencer and the total back pressure shall not exceed the supplier's recommendation.

Where the exhaust pipe is higher than the engine, means shall be provided to prevent any condensate flowing back to the engine. The exhaust pipe shall be positioned in such a way as to prevent exhaust gases from re-entering the pump room. It shall be insulated and installed so that it does not cause a fire ignition risk.

10.9.6 Fuel, fuel tank and fuel feed pipes

The quality of the diesel fuel used shall conform to the supplier's recommendations. The fuel tank shall contain sufficient fuel to enable the engine to run on full load for:

— 3 h for LH;

— 4 h for OH;

— 6 h for HHP and HHS.

The fuel tank shall be of welded steel. Where there is more than one engine, there shall be a separate fuel tank and fuel feed pipe for each one.

The fuel tank shall be fixed at a higher level than the motor's fuel pump to ensure a positive head, but not directly above the engine. The fuel tank shall have a sturdy fuel level gauge.

Any valves in the fuel feed pipe between the fuel tank and the engines shall be placed adjacent to the tank, have an indicator and be locked in the open position. Pipe joints shall not be soldered. Metallic pipes shall be used for fuel lines.

The feed pipe shall be situated at least 20 mm above the bottom of the fuel tank. A drain valve of at least 20 mm diameter shall be fitted to the base of the tank.

TB210

NOTE The fuel tank vent should be terminated outside the building.

10.9.7 Starting mechanism

10.9.7.1 General

Automatic and manual starting systems shall be provided and shall be independent except that the starter motor and batteries may be common to the two systems.

It shall be possible to start the diesel engine both automatically, upon receipt of a signal from the pressure switches, and manually by means of a push button on the pump controller. It shall be possible to shut down the diesel engine only manually; engine monitoring devices shall not cause the engine to stop.

The rated voltage of the batteries and starter motor shall be no less than 12 V.

10.9.7.2 Automatic starting system

The automatic starting sequence shall make six attempts to start the engine, each one of 5 s to 10 s duration, with a maximum pause of 10 s between each attempt. The starting device shall reset itself automatically. It shall function independently of the line power supply.

The system shall switch over automatically to the other battery after each starting attempt. The control voltage shall be drawn from both batteries simultaneously. Facilities shall be provided to prevent one battery having an adverse effect on the other.

10.9.7.3 Emergency manual starting system

Emergency manual start facilities, with starting power available from both batteries, shall be provided, with a breakable cover. Facilities shall be provided to prevent one battery having an adverse effect on the other.

10.9.7.4 Test facility for manual starting system

A manual start test button and indicator lamp shall be provided to permit periodic testing of the manual electric start system without breaking the cover over the emergency manual start facilities button. The starter panel shall be marked, adjacent to the lamp, with the wording:

OPERATE MANUAL START TEST BUTTON IF LAMP IS LIT

The manual start test button shall only be brought on line after an automatic engine start followed by a shut down or after six repeated unsuccessful attempts to start automatically. Either of the two conditions shall cause the indicator lamp to light and bring the manual start test button on line in parallel with the emergency manual start push button.

When a manual start test has been carried out, the circuit used for this purpose shall automatically become inoperable and the indicator lamp shall be extinguished. The automatic start facility shall be available, even when the manual start test button circuit is activated.

10.9.7.5 Starter motor

TB210

The electric starter motor shall incorporate a moveable pinion, which engages automatically with the flywheel gear rim. To avoid shock loading, the system shall not apply full power to the starting motor until the pinion is fully engaged. The pinion shall not be ejected from engagement by spasmodic engine firing. There shall be a means to prevent attempted engagement when the engine is rotating.

The starter motor shall cease to operate and shall return to the rest position if the pinion fails to engage with the flywheel gear ring. After the first failure to engage, the starter motor shall automatically make up to five further attempts to achieve engagement.

When the engine starts the starter motor pinion shall withdraw from the flywheel gear ring automatically by means of a speed sensor. Pressure switches, for example on the engine lubrication system or water pump outlet, shall not be used as a means of de-energizing the starter motor.

Speed sensors shall have a direct coupling to, or be gear-driven by, the engine. Flexible drives shall not be used.

10.9.8 Electric starter motor batteries

Two separate battery power supplies shall be provided and shall be used for no other purpose. Batteries shall be either open nickel-cadmium prismatic rechargeable cells complying with EN 60623 or lead-acid positive batteries complying with [A1⟩ EN 50342-1 and EN 50342-2 ⟨A1].

The electrolyte for lead acid batteries shall comply with [A1⟩ EN 50342-1 and EN 50342-2 ⟨A1].

Batteries shall be selected, used, charged and maintained in accordance with the requirements of this standard and with the supplier's instructions.

A hydrometer, suitable for checking the density of the electrolyte, shall be provided.

10.9.9 Battery chargers

Each starter battery shall be provided with an independent, continuously connected, fully automatic, constant potential charger, as specified by the supplier. It shall be possible to remove either charger while leaving the other operational.

NOTE 1 Chargers for lead acid batteries should provide a float voltage of (2,25 ± 0,05) V per cell. The nominal charging voltage should be suitable for local conditions (climate, regular maintenance, etc.). A boost charge facility should be provided for charging to a higher voltage not exceeding 2,7 V per cell. The charger output should be between 3,5% and 7,5% of the 10 h capacity of the battery.

NOTE 2 Chargers for open nickel-cadmium prismatic batteries should provide a float voltage of (1,445 ± 0,025) V per cell. The nominal charging voltage should be suitable for local conditions (climate, regular maintenance, etc.). A boost charge facility should be provided for charging to a higher voltage not exceeding 1,75 V per cell. The charger output should be between 25% and 167% of the 5 h capacity of the battery.

10.9.10 Siting of batteries and chargers

Batteries shall be mounted on stands.

The chargers may be mounted with the batteries. Batteries and chargers shall be located in readily accessible positions where the likelihood of contamination by oil fuel, damp, pumpset cooling water, or of damage by vibration is minimal. The battery shall be as close as possible to the engine starter motor, subject to the above constraints, in order to minimize voltage drop between the battery and starter motor terminal.

10.9.11 Starter alarm indication

The following conditions shall each be indicated both locally and at a responsibly manned location (see annex *I*):

a) the use of any switch which prevents the engine starting automatically;

b) the failure of the engine to start after the six attempts;

c) pump running;

d) diesel controller fault;

The warning lights shall be appropriately marked.

10.9.12 Tools and spare parts

A standard kit of tools as recommended by the engine and pump suppliers shall be provided together with the following spare parts:

a) two sets of fuel filter elements and seals;

b) two sets of lubrication oil filter elements and seals;

c) two sets of belts (where used);

d) one complete set of engine joints, gaskets and hoses;

e) two injector nozzles.

TB210

10.9.13 Engine tests and exercising

10.9.13.1 Supplier's test and certification of results

Each complete engine and pumpset shall be tested by the supplier for no less than 1,5 h at the rated flow. The following shall be recorded on the test certificate:

a) the engine speed with the pump churning;

b) the engine speed with the pump delivering water at the rated flow;

c) the pump churning pressure;

d) the suction head at the pump inlet;

e) the pump outlet pressure at the rated flow downstream of any outlet orifice plate;

f) the ambient temperature;

g) the cooling water temperature rise at the end of the 1,5 h run;

h) the cooling water flow rate;

i) the lubrication oil temperature rise at the end of the test run;

j) where the engine is fitted with a heat exchanger the initial temperature and the temperature rise of the engine closed circuit cooling water.

10.9.13.2 Site commissioning test

When commissioning an installation the automatic starting system of the diesel engine shall be activated with the fuel supply isolated for the six cycles each of no less than 15 s cranking and no more than 15 s or less than 10 s rest. After completion of the six starting cycles the fail to start alarm shall operate. The fuel supply shall than be restored and the engine shall start when the manual start test button is operated.

11 Installation type and size

11.1 Wet pipe installations

11.1.1 General

Except where covered by 11.1.2, wet pipe installations are permanently charged with water under pressure. Wet pipe installations shall be installed only in premises where there is no possibility of frost damage to the installation, and where the ambient temperature will not exceed 95 °C.

Only wet pipe installations shall be used for grid and loop systems.

TB208.3.1

11.1.2 Protection against freezing

Parts of the installation subject to freezing may be protected by anti-freeze liquid or electrical trace heating or subsidiary dry pipe or alternate extensions (see 11.5).

11.1.2.1 Protection by anti-freeze liquid

The number of sprinklers in any one section of piping protected by anti-freeze liquid shall not exceed 20. Where more than two anti-freeze sections are controlled by one control valve set, the total number of sprinklers in the anti-freeze sections shall not exceed 100. The anti-freeze solution shall have a freezing point below the expected minimum temperature for the locality. The specific gravity of the prepared solution shall be checked using a suitable hydrometer. Systems which rely on anti-freeze liquid shall be fitted with backflow prevention devices to prevent contamination of the water.

11.1.2.2 Protection by electrical trace heating

The trace heating system shall be monitored for power supply failure and failure of the heating element(s) or sensor(s) (see annex I). The piping shall be provided with a Euroclass A1 or A2 or equivalent in existing national classification systems insulation.

Duplicate heating elements shall be provided over the unheated pipework. Each of the two elements shall be capable of maintaining the pipework at the minimum temperature of not less than 4 °C. Each trace heating circuit shall be electrically monitored and switched by separate circuits. Trace heating tape shall not crossover other lengths of trace heating tape. Trace heating tape shall be affixed on the other side of the pipe to the sprinkler heads. Trace heating tape shall terminate within 25 mm from the pipe ends. All trace heated pipework shall be lagged with Euroclass A1 or A2 or equivalent in existing national classification systems insulating material of not less than 25 mm thick with a water resistant covering. All ends shall be sealed to prevent ingress of water. Trace heating tape shall have a maximum rating of 10 W/m.

11.1.3 Size of installations

The maximum area controlled by a single wet alarm valve, including any sprinklers in a subsidiary extension, shall not exceed that shown in Table 17.

Table 17 — Maximum protected area in wet pipe and pre-action installations

Hazard class	Maximum protected area per control valve set m^2
LH	10 000
OH, including any LH sprinklers	12 000, except as allowed in annexes D and F.
HH, including any OH and LH sprinklers	9 000

TB208.5.1
TB229.3.7

11.2 Dry pipe installations

11.2.1 General

TB208
TB219

Dry pipe installations are normally charged with air or inert gas under pressure downstream of the dry alarm valve and water under pressure upstream of the dry alarm valve.

A permanent air/inert gas supply to maintain the pressure in the pipework shall be installed. The installation shall be pressurized to fall within the pressure range recommended by the alarm valve supplier.

Dry pipe installations shall be installed only where there is a possibility of frost damage or the temperature exceeds 70 °C, e.g. in drying ovens.

11.2.2 Size of installations

The net volume of the pipework downstream of the control valve set shall not exceed that shown in Table 18, unless a calculation and test shows that the maximum time between a sprinkler opening and water discharging is less than 60 s. The test shall be carried out using the remote test valve specified in 15.5.2.

NOTE It is strongly recommended that dry and alternate installations should not be used for HHS applications, since the delay in water reaching the first operating sprinklers could seriously impair the effectiveness of the system.

Table 18 — Maximum size per installation - Dry and alternate installations

Installation type	Maximum volume of pipework m^3	
	LH and OH	HH
Without accelerator or exhauster	1,5	-
With accelerator or exhauster	4,0	3,0

TB208
TB219

11.3 Alternate installations

11.3.1 General

Alternate installations incorporate either an alternate alarm valve or a composite set comprising a wet alarm valve and a dry alarm valve. During the winter months the installation pipework downstream of the alternate or dry alarm valve is charged with air or inert gas under pressure and the remainder of the system upstream of the alarm valve with water under pressure. At other times of the year the installation operates as a wet pipe installation.

11.3.2 Size of installations

The net volume of the pipework downstream of the control valve set shall not exceed that shown in Table 18.

11.4 Pre-action installations

11.4.1 General

Pre-action installations shall be one of the following types:

11.4.1.1 Type A pre-action installation

This is an otherwise normal dry pipe installation in which the control valve set is activated by an automatic fire detection system but not by the operation of the sprinklers.

The air/inert gas pressure in the installation shall be monitored at all times (see annex I). At least one quick opening manually operated valve shall be installed in an appropriate position to enable the pre-action valve to be activated in an emergency.

[A2] In the event of a fault in the fire detection system, the installation shall operate as an ordinary dry pipe system. [A2]

NOTE Type A pre-action installations should only be installed in areas where considerable damage could occur if there was an accidental discharge of water.

11.4.1.2 Type B pre-action installation

This is an otherwise normal dry pipe installation in which the control valve set is activated either by an automatic fire detection system or by the operation of the sprinklers. Independently of the response of the detectors a pressure drop in the pipework causes the opening of the alarm valve.

Type B pre-action installations may be installed wherever a dry pipe system is called for and the spread of fire is expected to be rapid. They may also be used instead of ordinary dry pipe systems with or without an accelerator or exhauster.

11.4.1.3 Sprinkler systems with more than one pre-action installation

Where a sprinkler system includes more than one pre-action sprinkler installation, a risk assessment shall be undertaken to establish whether simultaneous operation of more than one pre-action installation could occur. Where simultaneous charging of pre-action sprinkler installations may occur the following shall be implemented:

a) the volume of stored water supplies shall be increased by the volume of the total pre-action installations;

b) the time between multiple pre-action installations tripping and water discharging from any remote test valve on the installations under consideration shall not exceed 60 s.

11.4.2 Automatic detection system

The detection system shall be installed in all rooms and compartments protected by the pre-action sprinkler system and shall comply with the relevant parts of EN 54 or, in their absence, with appropriate specifications valid in the place of use of the sprinkler system.

11.4.3 Size of installations

The number of sprinklers controlled by a pre-action alarm valve shall not exceed that shown in Table 17.

11.5 Subsidiary dry pipe or alternate extension

11.5.1 General

Subsidiary dry pipe or alternate extensions shall conform to 11.2 and 11.3 except that they will be of limited extent and form extensions to normal wet installations.

They shall be installed only as follows:

a) as a dry pipe or alternate extension to a wet pipe installation in small areas where there is possible frost damage in an otherwise adequately heated building;

TB208
TB219

TB208
TB219

b) as a dry pipe extension to a wet pipe or alternate installation in cold stores and high temperature ovens or stoves.

11.5.2 Size of subsidiary extensions

The number of sprinklers in any subsidiary extension shall not exceed 100. Where more than two subsidiary extensions are controlled by one control valve set, the total number of sprinklers in the subsidiary extensions shall not exceed 250.

11.6 Subsidiary water spray extension

These extensions utilize open sprinklers or sprayers connected to a sprinkler installation via their own actuation valve (deluge valve or multiple control).

Water spray extensions may be connected to a sprinkler installation, provided that the connection is no greater than 80 mm and that the additional water demand is taken into consideration when designing the water supplies (see clause 8).

These installations are installed where there are expected to be intensive fires with a very fast rate of fire spread and where it is desirable to apply water over a complete area in which a fire may originate and spread.

12 Spacing and location of sprinklers

12.1 General

12.1.1 All measurements of sprinkler spacing shall be taken in the horizontal plane except where otherwise specified.

12.1.2 A clear space shall be maintained below the deflector of roof and ceiling sprinklers of at least:

a) for LH and OH:

— 0,3 m for flat spray sprinklers;

— 0,5 m in all other cases.

b) for HHP and HHS:

— 1,0 m.

12.1.3 Sprinklers shall be installed as specified by the supplier.

Except when dry pendent pattern sprinklers are used, sprinklers on dry pipe, alternate and pre-action installations shall be upright. Upright sprinkler shall be fitted with yoke arms parallel to the pipe.

NOTE 1 Upright sprinklers can be less prone to mechanical damage and collection of foreign matter in the sprinkler fittings. Sprinklers in the upright orientation also facilitate complete drainage of water from the sprinkler waterways.

NOTE 2 Pendent sprinklers have the potential to deliver greater densities of water at a higher velocity, immediately below and adjacent to the sprinkler axis, consequently pendent sprinklers can have better fire control abilities for some applications such as in-rack protection and protection of storage areas.

12.2 Maximum area of coverage per sprinkler

The maximum area of coverage per sprinkler shall be determined in accordance with Table 19 for sprinklers other than sidewall sprinklers and in Table 20 for sidewall sprinklers.

NOTE Examples are given in Figure 8 where dimensions *S* and *D* are the distance between sprinklers in opposing planes.

Table 19 — Maximum coverage and spacing for sprinklers other than sidewall

Hazard class	Maximum area per sprinkler	Maximum distances as shown in Figure 8 m		
		Standard layout S and D	Staggered layout	
	m²		S	D
LH	21,0	4,6	4,6	4,6
OH	12,0	4,0	4,6	4,0
HHP and HHS	9,0	3,7	3,7	3,7

A2 Standard layout A2

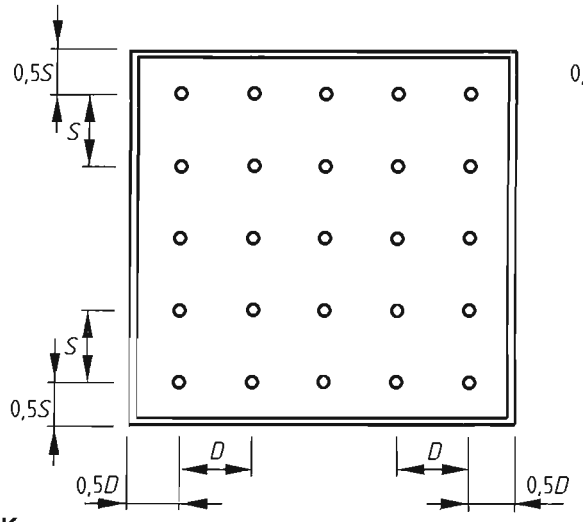

A2 Staggered layout A2

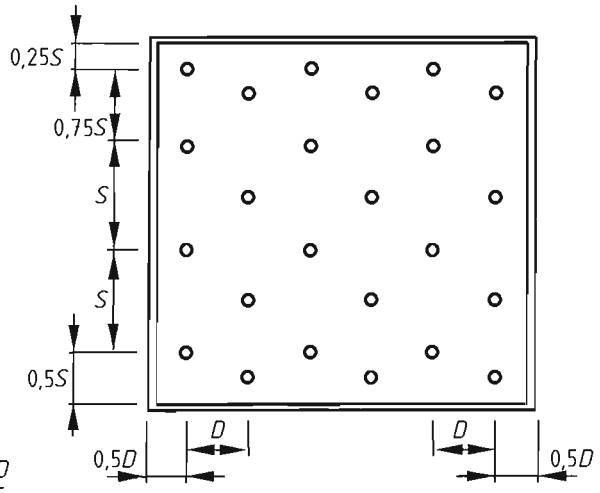

Key
S Distance between sprinklers
D Distance between sprinklers

Figure 8 — Ceiling sprinkler spacing

TB222 (for EPEC)

Table 20 — Maximum coverage and spacing for sidewall sprinklers

Hazard class	Maximum area per sprinkler m²	Spacing along walls		Room width (*w*) m	Room length (*l*) m	Rows of sidewall sprinklers	Spacing pattern (horizontal plane)
		Between sprinklers m	Sprinkler to end of wall m				
LH	17,0	4,6	2,3	$w \leq 3,7$	any	1	single line
				$3,7 < w \leq 7,4$	$\leq 9,2$	2	standard
					$> 9,2$	2	staggered
				$w > 7,4$	any	2 (see note 1)	standard
OH	9,0	3,4 (see note 2)	1,8	$w \leq 3,7$	any	1	single line
				$3,7 < w \leq 7,4$	$\leq 6,8$	2	standard
					$> 6,8$	2	staggered
				$w > 7,4$	any	2	standard (see note 1)

NOTE 1 An additional row or rows of roof or ceiling sprinklers is required.
NOTE 2 This can be increased to 3,7 m provided the ceiling has a fire resistance of no less than 120 min.
NOTE 3 The sprinkler deflectors should be located between 0,1 and 0,15 m below the ceiling and between 0,05 and 0,15 m horizontally from the wall.
NOTE 4 There should be no obstruction at the ceiling within a square extending along the wall 1,0 m on each side of the sprinkler and 1,8 m perpendicular to the wall.

12.3 Minimum distance between sprinklers

Sprinklers shall not be installed at intervals of less than 2 m except in the following cases:

— where arrangements are made to prevent adjacent sprinklers from wetting each other. This may be achieved by using baffles of approximately 200 mm x 150 mm, or by using intervening constructional features;

— intermediate sprinklers in racks;

— escalators and stairwells (see 12.4.11).

12.4 Location of sprinklers in relation to building construction

12.4.1 The maximum distance from walls and partitions to the sprinklers shall be the smallest appropriate value of the following:

— 2,0 m for standard spacing;

— 2,3 m for staggered spacing;

— 1,5 m where the ceiling or roof is open-joisted or the rafters are exposed;

— 1,5 m from the open face of open-faced buildings;

— 1,5 m where the external walls are of combustible material;

— 1,5 m where the external walls are of metal, with or without combustible linings or insulating materials;

— half the maximum distance given in Tables 19 and 20.

12.4.2 Sprinklers shall be installed not lower than 0,3 m below the underside of combustible ceilings or 0,45 m below Euroclass A1 or A2 or an equivalent in existing national classification systems roofs or ceilings.

Where possible, sprinklers shall be situated with the deflector between 0,075 m and 0,15 m below the ceiling or roof except when ceiling, flush or recessed sprinklers are used. Where circumstances make it unavoidable to use the maximum distances of 0,3 m and 0,45 m, the area involved shall be as small as possible.

12.4.3 Sprinklers shall be installed with their deflectors parallel to the slope of the roof or ceiling. Where the slope is greater than 30° to the horizontal plane, a row of sprinklers shall be fixed at the apex or not more than 0,75 m radially from it.

12.4.4 The distance from the edge of a canopy to the nearest sprinklers shall not exceed 1,5 m.

12.4.5 Skylights with a volume greater than 1 m^3 measured above the normal ceiling level shall be sprinkler protected unless the distance from the normal ceiling level to the top of the skylight does not exceed 0,3 m, or there is a tightly fitting frame and glass fitted level with the roof or ceiling.

12.4.6 [A1] **Beams and similar obstructions** [A1]

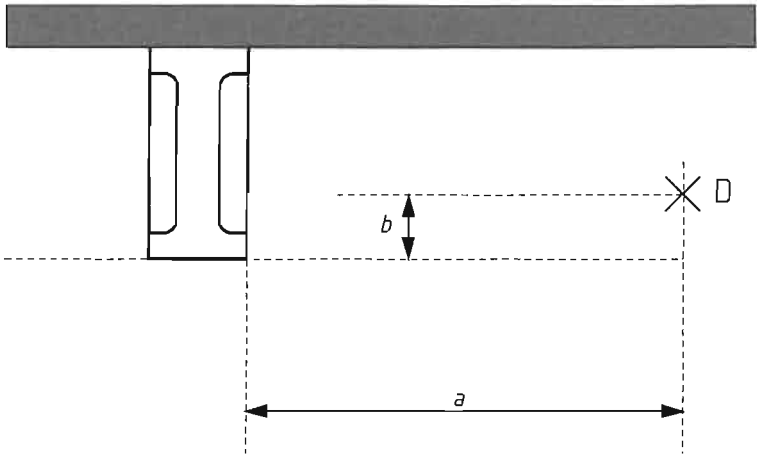

Key
D Deflector
a Distance from beam [A1] *deleted text* [A1]
b Distance from underside of beam [A1] *deleted text* [A1]

Figure 9 — Sprinkler location relative to beams

[A1] When the deflector (at D in Figure 9) is positioned above the level of the underside of beams or similar obstructions, one of the following solutions shall be adopted in order to ensure that effective discharge of the sprinklers is not impaired: [A1]

a) the dimensions shown in Figure 9 shall conform to the values specified in Figure 10;

b) the spacing requirements of 12.4.7 shall be applied;

c) the sprinklers shall be installed on either side as though it were a wall.

Sprinklers shall be positioned directly above girders or beams no wider than 0,2 m at a vertical distance of not less than 0,15 m.

In all cases, the ceiling clearances specified in 12.4.2 are applicable.

If none of the above solutions is feasible, e.g. because it results in a large number of sprinklers, the beams may be underdrawn and sprinklers installed underneath the flat ceiling thus formed.

A1

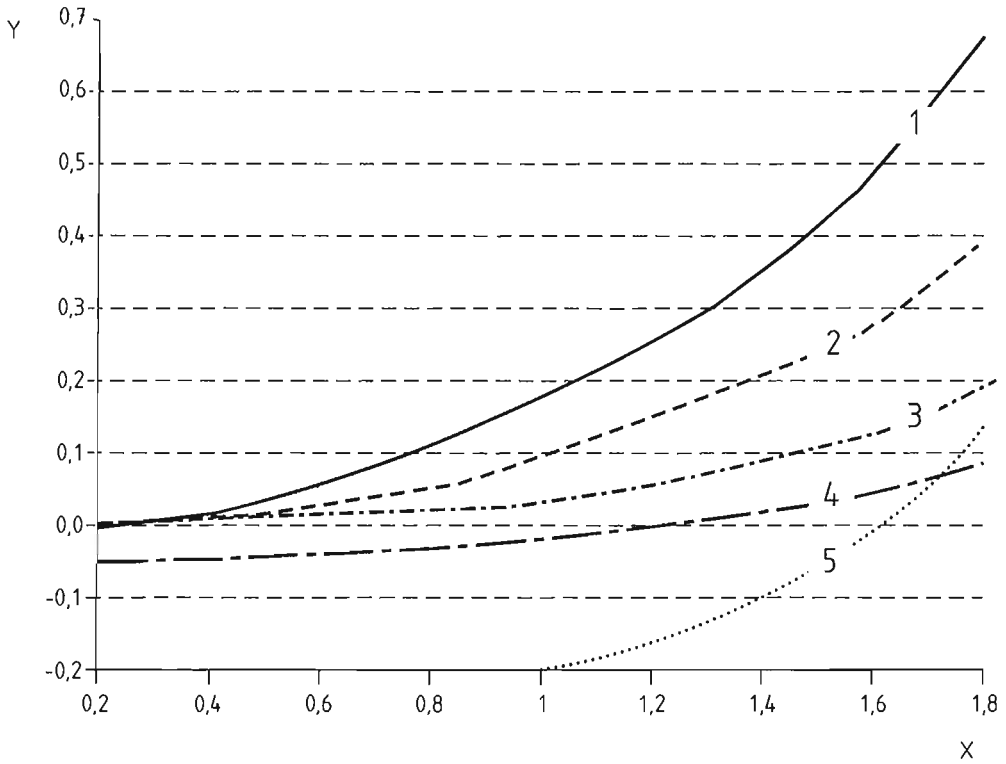

Key

1 spray pendant
2 conventional upright
3 spray upright
4 flat spray
5 conventional pendant
X minimum horizontal distance (a) from beam to sprinkler, in m
Y height of deflector (b) above (+) or below (-) beam, in m A1

Figure 10 — Distance of sprinkler deflector from beams

12.4.7 Beams and bays

Where narrow bays are formed between beams spaced at not more than 1,5 m between centres, the following spacing shall be used:

— one row of sprinklers shall be installed in the centre of each 3rd bay, with another row underneath the centre line of the beam separating the two unprotected bays (see Figures 11 and 12);

— the maximum distance between sprinklers in the other direction, i.e. along the bay, (*S* in Figures 11 and 12), shall be in accordance with the rules for the hazard class involved (see 12.2);

— sprinklers shall be installed at a distance no greater than 1 m from walls parallel to the beams and no greater than 1,5 m from walls perpendicular to the beams;

— sprinklers installed inside bays shall be placed such that the deflectors are between 0,075 m and 0,15 m below the underside of the ceiling.

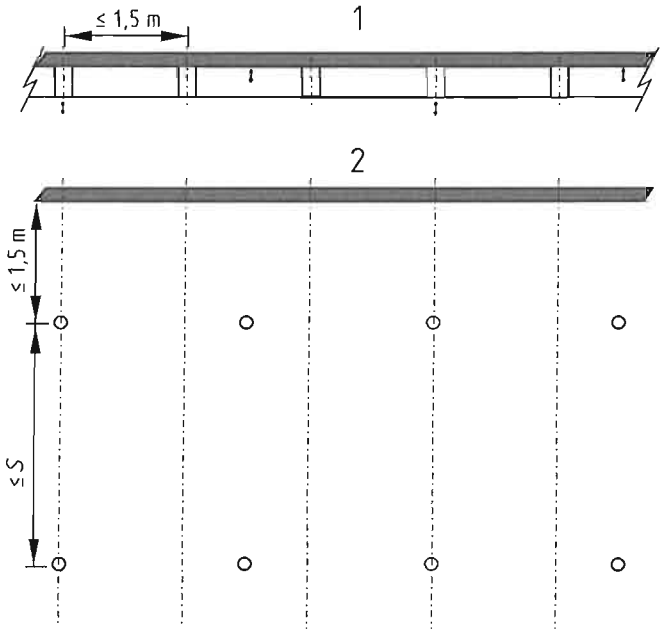

Key
1 Ceiling
2 Wall

Figure 11 — Beam and bay spacing (beams in one direction only)

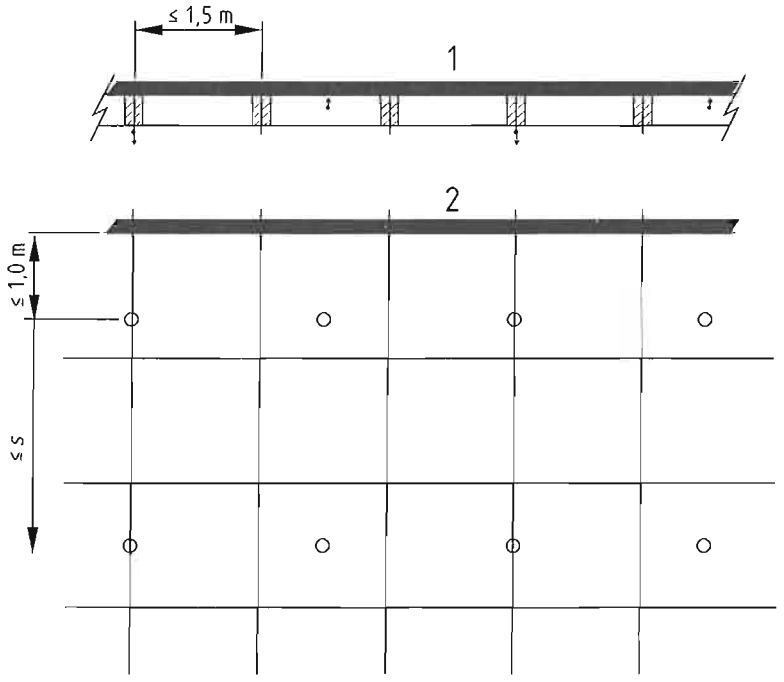

Key
1 Ceiling
2 Wall

Figure 12 — Beam and bay spacing (beams in both directions)

12.4.8 Roof trusses

Sprinklers shall be installed in accordance with one of the following:

a) directly above or below the truss where the flange of the truss is no more than 0,2 m wide.

b) not less than 0,3 m laterally from truss members where the flange of the truss is not more than 0,1 m wide

c) not less than 0,6 m laterally from truss members where the flange of the truss is greater than 0,1 m wide

12.4.9 Columns

If roof or ceiling sprinklers are installed closer than 0,6 m to one side of a column, another sprinkler shall be installed on the opposite side of the column within 2 m of the column.

12.4.10 Platforms, ducts, etc.

Sprinklers shall be installed under platforms, ducts, heating panels, galleries, walkways etc., which are:

a) rectangular, more than 0,8 m wide and less than 0,15 m from adjacent walls or partitions;

b) rectangular and more than 1,0 m wide;

c) circular, more than 1,0 m in diameter and less than 0,15 m from adjacent walls or partitions;

d) circular and more than 1,2 m in diameter.

12.4.11 Escalators and stair wells

The number of sprinklers shall be increased around the ceiling opening formed by escalators, stairs etc. Sprinklers shall be neither more than 2 m nor less than 1,5 m away from each other. If, owing to the design of the structure, e.g. girders, the minimum distance of 1,5 m cannot be maintained, smaller spacing may be used provided adjacent sprinklers are not able to wet each other.

The horizontal distance between the sprinklers and the opening in the ceiling shall not exceed 0,5 m. These sprinklers shall be capable of providing the minimum flow rate per sprinkler in the rest of the ceiling protection.

For the purposes of hydraulic calculation, only the sprinklers on the longer side of the opening need be considered.

12.4.12 Vertical shafts and chutes

In shafts with combustible surfaces, sprinklers shall be installed at each alternate floor level and at the top of any trapped section.

At least one sprinkler shall be installed at the top of all shafts except where the shaft is incombustible and inaccessible and contains materials in accordance with Euroclass A1 or equivalent in existing national classification systems except electrical cabling.

12.4.13 Suspended ceilings

The use of suspended ceiling material below the sprinklers is not allowed unless the material has been shown not to impair sprinkler protection.

Where sprinklers are fitted below suspended ceilings, the ceiling material shall be of a type, which has been shown to be stable under fire conditions.

12.4.14 Suspended open cell ceilings

Suspended open cell ceilings, i.e. ceilings with a regular open cell construction, may be used beneath LH and OH sprinkler installations where all of the following conditions are met:

— the total plan open area of the ceiling, including light fittings, is not less than 70% of the ceiling plan area;

— the minimum dimension of the ceiling openings is not less than 0,025 m or not less than the depth of the suspended ceilings, whichever is the greater;

— the structural integrity of the ceiling and any other equipment, such as light fittings within the volume above the suspended ceiling, will not be affected by operation of the sprinkler system;

— there are no storage areas below the ceiling.

In such cases, sprinklers shall be installed as follows:

— the sprinkler spacing above the ceiling shall not exceed 3 m;

— the vertical distance between any conventional or spray sprinkler deflector and the top of the suspended ceiling shall be not less than 0,8 m for sprinklers other than flat spray sprinklers and not less than 0,3 m if flat spray sprinklers are used;

— Supplementary sprinklers shall be installed to discharge below obstructions (e.g. light fittings) exceeding 0,8 m in width.

Where obstructions above the ceiling are likely to cause significant interference of the water discharge they shall be treated as walls for the purpose of sprinkler spacing.

12.5 Intermediate sprinklers in HH occupancies

12.5.1 General

Sprinklers protecting double row racks shall be installed in the longitudinal flue spaces, preferably in the intersection with the transverse flue (see Figures 13 and 14).

Whenever any rack or structural steelwork is likely to interfere significantly with the water discharge from the sprinklers, additional sprinklers shall be provided and taken into account in the flow calculation.

It shall be ensured that water from sprinklers operating at intermediate levels can penetrate the goods stored. The distance between goods stored in racking and placed back to back shall be at least 0,15 m, and if necessary pallet stops fitted. The clearance between the sprinkler deflectors and the top of the storage shall be not less than 0,10 m for flat spray sprinklers and 0,15 m for other sprinklers.

12.5.2 Maximum vertical distance between sprinklers at intermediate levels

The vertical distance from the floor to the lowest intermediate level and between levels shall not exceed 3,50 m or two tiers, whichever is the lesser, as shown in Figures 13 and 14. An intermediate level shall be installed above the top level of storage except where all the roof or ceiling sprinklers are situated at less than 4 m above the top of the storage.

In no case shall the highest level of intermediate sprinklers be installed lower than one tier below the top of the storage.

12.5.3 Horizontal position of sprinklers at intermediate levels

In the case of Category I or II goods, sprinklers shall where possible be installed in the longitudinal flue at the intersection with every second transverse flue, with the sprinklers staggered with respect to the next highest row (see Figure 13). The horizontal distance between sprinklers shall not exceed 3,75 m. The product of the horizontal and vertical distances between sprinklers shall not exceed 9,8 m^2.

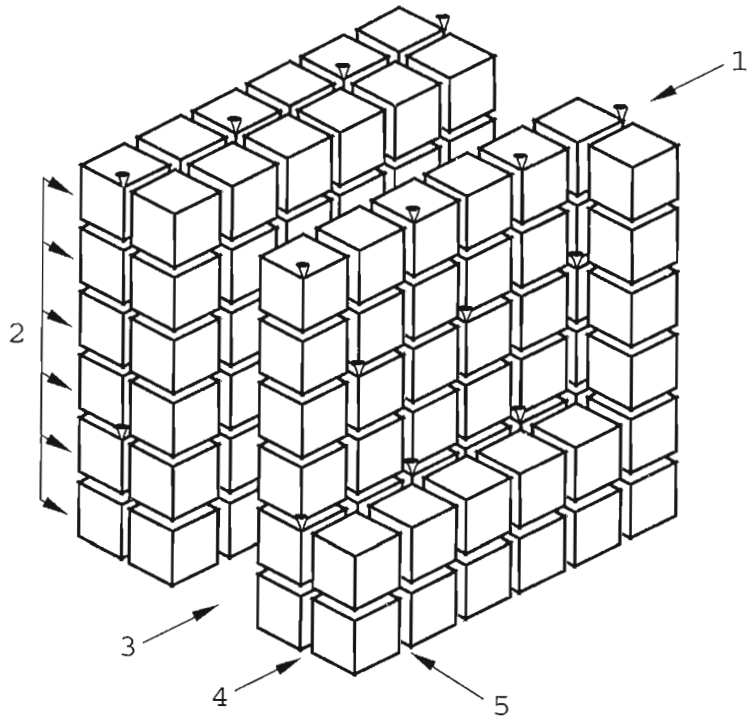

Key
1 Sprinkler row
2 Tiers
3 Aisle
4 Longitudinal flue
5 Transverse flue

Figure 13 — Location of rack intermediate level sprinklers – Category I or II

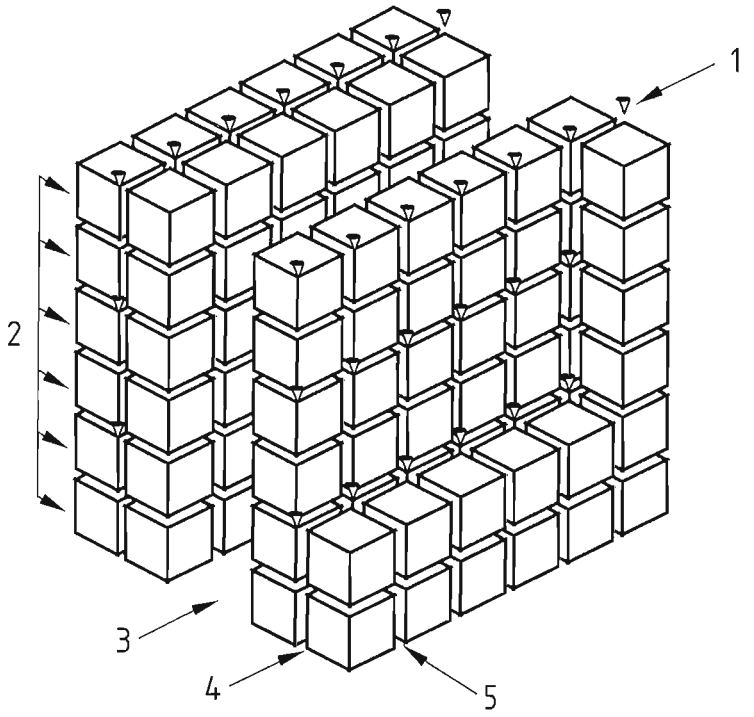

Key
1 Sprinkler row
2 Tiers
3 Aisle
4 Longitudinal flue
5 Transverse flue

Figure 14 — Location of rack intermediate level sprinklers – Category III or IV

In the case of Category III or IV goods, sprinklers shall be installed in the longitudinal flue at the intersection with each transverse flue (see Figure 14). The horizontal distance between sprinklers shall not exceed 1,9 m and the product of the horizontal distance and the vertical distance between sprinklers shall not exceed 4,9 m^2.

12.5.4 Numbers of rows of sprinklers at each level

The number of sprinkler rows per level shall be determined by the total rack width. When racking is placed back to back the total width shall be calculated by adding together the width of each rack and the distance between them.

One row of sprinklers per level shall be installed for every 3,2 m of rack width. They shall be installed in the flue spaces wherever possible.

12.5.5 HHS intermediate sprinklers in non-shelved racks.

Intermediate sprinklers shall be installed for palletized rack storage and multiple row drive-through storage (see type ST4 in Figure 3 and Table 4) as follows:

a) single row racks no more than 3,2 m wide shall be protected by single rows of sprinklers fitted at the tier levels shown in Figures 13 and 14;

b) double row racks no more than 3,2 m wide shall be protected by sprinklers centrally in the longitudinal flue space, at the stack ends, and at the tier levels shown in Figures 13 and 14;

c) double or multiple row racks more than 3,2 m wide, but no more than 6,4 m wide shall be protected by two rows of sprinklers installed no more than 3,2 m apart. Each row shall be the same distance from the nearest shelf edge. The sprinklers at a particular level in each line shall be located in the same set of transverse flues.

Where any rack or structural steelwork could significantly interfere with the water distribution from a sprinkler, an additional sprinkler shall be provided to ensure water distribution on the area where the water would have been impeded.

12.5.6 HHS intermediate sprinklers below solid or slatted shelves in racks (ST5 and ST6)

Where intermediate sprinklers are required, they shall be installed above each shelf (including the top shelf if the roof or ceiling sprinklers are more than 4 m above the goods or water access to the goods is restricted), and located as shown in Table 21 and Figure 15. The vertical distance between rows shall not exceed 3,5 m.

Single rows of sprinklers shall be central above shelves. Double rows shall be positioned so that each row is the same distance from the nearest shelf edge.

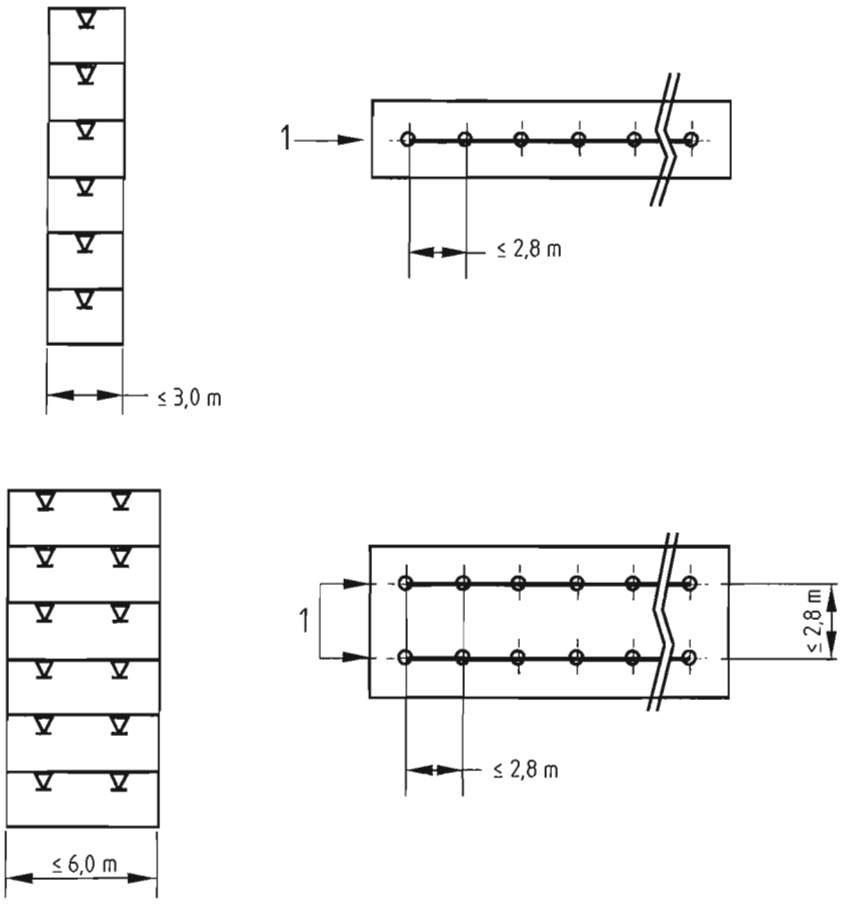

Key
1 Sprinkler row

Figure 15 — Location of intermediate sprinklers in type ST5 and ST6 storage

The distance from the end of the shelf parallel to the range pipe lines to the nearest sprinkler shall be half the sprinkler spacing along the range lines or 1,4 m, whichever is the less.

Table 21 — Location of intermediate sprinklers in type ST5 and ST6 storage

Shelf width - s m	Rows of sprinklers	Maximum distance between sprinklers along rows m	Maximum distance between rows of sprinklers m
ST5: s ≤ 1,0	1	2,8	-
ST6: 1,0 < s ≤ 3,0	1	2,8	-
ST6: 3,0 < s ≤ 6,0	2	2,8	2,8

TB231.2.1

13 Pipe sizing and layout

13.1 General

13.1.1 Pipe sizing

Pipe sizes shall be determined using one of the following methods:

— pre-calculated systems, where the diameters are partly taken from tables and partly calculated (see 13.3);

— fully calculated systems, where all diameters are determined by hydraulic calculation (see 13.4).

The designer may choose between the two systems, except in the following cases, where full calculations shall always be used:

— layouts with intermediate level HHS sprinklers;

— gridded or looped layouts.

13.2 Calculation of pressure losses in pipework

13.2.1 Pipe friction loss

Calculations of pipe friction loss shall be not less than those derived from the Hazen-Williams formula:

$$p = \frac{6{,}05 \times 10^5}{C^{1{,}85} \times d^{4{,}87}} \times L \times Q^{1{,}85}$$

where:

p is the pressure loss in the pipe, in bar;

Q is the flow through the pipe, in litres per minute;

d is the mean internal diameter of the pipe, in millimetres;

C is a constant for the type and condition of the pipe (see Table 22);

L is the equivalent length of pipe and fittings, in metres.

The values of C indicated in Table 22 shall be used.

Table 22 — C values for various types of pipe

Type of pipe	Value of *C*
cast iron	100
ductile iron	110
mild steel	120
galvanized steel	120
spun cement	130
cement lined cast iron	130
stainless steel	140
copper	140
reinforced glass fibre	140
NOTE The list is not exhaustive	

The pressure loss due to velocity may be ignored.

13.2.2 Static pressure difference

The static pressure difference between two inter-connecting points in a system shall be calculated from:

$$p = 0{,}098h$$

where:

p is the static pressure difference, in bar;

h is the vertical distance between the points, in metres.

13.2.3 Velocity

The [A1] *deleted text* [A1] water velocity shall not exceed:

[A2]

— 6 m/s through any valve, flow monitoring device or/and strainer; [A2]

— 10 m/s at any other point in the system,

for the stabilized flow condition at the demand point [A1] with the total [A1] number of sprinklers assumed to be in simultaneous operation.

13.2.4 Pressure loss through fittings and valves

The pressure loss due to friction in valves, and in fittings where the direction of water flow is changed through 45° or more, shall be calculated using the formula specified in 13.2.1. The appropriate equivalent length shall be one of the following:

a) as specified by the equipment supplier;

b) as taken from Table 23, if a) is not available.

If there is a bend, tee or cross where there is a change in direction of flow and there is also a change in diameter at the same point, the equivalent pipe length and pressure loss shall be determined by using the smaller diameter.

Table 23 — Equivalent length of fittings and valves

A1

Fittings and valves	Equivalent length of steel straight pipe for a *C* value of 120 [a] (m)										
	Nominal diameter (mm)										
	20	25	32	40	50	65	80	100	150	200	250
90° screwed elbow (standard)	0,76	0,77	1,0	1,2	1,5	1,9	2,4	3,0	4,3	5,7	7,4
90° welded elbow (r/d = 1,5)	0,30	0,36	0,49	0,56	0,69	0,88	1,1	1,4	2,0	2,6	3,4
45° screwed elbow (standard)	0,34	0,40	0,55	0,66	0,76	1,0	1,3	1,6	2,3	3,1	3,9
Standard screwed tee or cross (flow through branch)	1,3	1,5	2,1	2,4	2,9	3,8	4,8	6,1	8,6	11,0	14,0
Gate valve - straight way	-	-	-	-	0,38	0,51	0,63	0,81	1,1	1,5	2,0
Alarm or non-return valve (swinging type)	-	-	-	-	2,4	3,2	3,9	5,1	7,2	9,4	12,0
Alarm or non-return valve (mushroom type)	-	-	-	-	12,0	19,0	19,7	25,0	35,0	47,0	62,0
Butterfly valve	-	-	-	-	2,2	2,9	3,6	4,6	6,4	8,6	9,9
Globe valve	-	-	-	-	16,0	21,0	26,0	34,0	48,0	64,0	84,0

[a] These equivalent lengths may be converted as necessary for pipes with other *C* values by multiplying by the following factors:

C value	100	110	120	130	140
Factor	0,714	0,85	1,00	1,16	1,33

A1

13.2.5 Accuracy of calculations

13.2.5.1 Calculations shall be carried out in the units and with the accuracy given in Table 24.

Table 24 — Accuracy of hydraulic calculations

Quantity	Unit	Accurate to
Length	m	0,01
Height	m	0,01
Equivalent length	m	0,01
Flow	l/min	1,0
Pressure loss	mbar/m	1,0
Pressure	mbar	1,0
Velocity	m/s	0,1
Area	m^2	0,01
Density of water application	mm/min	0,1

13.2.5.2 The calculations shall balance as follows:

— the algebraic sum of pressure loss in a loop shall equal (0 ± 1) mbar;

— where water flows join at a junction, the calculation shall balance to ± 1 mbar;

— the algebraic sum of water flow at a junction shall equal (0 ± 0,1) l/min.

13.3 Pre-calculated systems

13.3.1 General

13.3.1.1 Pipe sizes shall be determined partly from the following tables and partly by hydraulic calculation. Pipe diameters shall not increase in the direction of flow of water to any sprinkler.

13.3.1.2 Range pipe sizes and the maximum number of sprinklers fed by each size of pipe in the range shall be as specified in Table 30, except in the case of Light Hazard, where Table 27 specifies only the pipes feeding the last three or four sprinklers on each range.

TB231.2.1

13.3.1.3 The size of all pipes upstream of each design point shall be calculated as specified in 13.3.3.2 for Light Hazard and 13.3.4.2 for Ordinary Hazard.

13.3.1.4 Risers and drops connecting distribution pipes to ranges, and pipes connecting single sprinklers, other than arm pipes, shall be considered as distribution pipes and sized accordingly.

13.3.2 Location of Design Points

13.3.2.1 The design point shall be at the point of connection of a horizontal distribution pipe to one of the following:

— a range pipe;

— a riser or drop connecting ranges to distribution pipes;

— a pipe feeding a single sprinkler.

The maximum number of sprinklers downstream of each design point shall be as specified in Tables 25 and 26.

13.3.2.2 In Light Hazard installations the design point shall be downstream of the sprinkler identified in Table 25 column 3.

Table 25 — Location of design points - LH

Hazard Class	Number of sprinklers on a range, in a room	Location of design point downstream of *n*th sprinkler where *n* is
LH	≤ 3	3
	≥ 4	4

13.3.2.3 In Ordinary and High Hazard installations the design point shall be downstream of the junction of distribution pipes and range pipes in accordance with Table 26 column 3.

Where the number of sprinklers on one array, in a room or on a single distribution pipe, is less than or equal to the number of sprinklers for which the distribution pipes are designed, (see Table 26 column 2), the design point shall be downstream of the point of connection to the distribution pipe of the range or the array hydraulically nearest to the control valve set.

NOTE 1 Figure16 illustrates typical range pipe arrays.

NOTE 2 Examples of pipe layouts with the appropriate design points are given in Figure 17 for LH, Figure 18 for OH and Figures 19, 20 and 21 for HHP and HHS.

Table 26 — Location of design points - OH, HHP and HHS

Hazard Class	Number of sprinklers on a distribution pipe, in a room	Location of design point on a distribution pipe junction to a range holding *n*th sprinkler where *n* is	Range layout
OH	> 16	17	two end-side
	> 18	19	all others
HHP and HHS	> 48	49	all

13.3.3 Light Hazard - LH

13.3.3.1 The size of range pipes, and terminal distribution pipes downstream of the design point shall be as specified in Table 27.

It is permitted to install a 25 mm diameter pipe between the design point and the control valve set if a hydraulic calculation shows this to be possible. However, if the 2 sprinkler point is the decisive one, a 25 mm pipe shall not be installed between the 3rd and 4th sprinkler.

Table 27 — Range pipe diameters for LH installations

Pipes	Diameter mm.	Maximum number of sprinklers on range pipes
All range pipes and terminal distribution pipes	20	1
	25	3

13.3.3.2 All pipework between the control valve set and the design point at each extremity of an array shall be sized by hydraulic calculation using the values in Tables 28 and 29.

Table 28 — Maximum friction loss between control valve set and any design point - LH

Number of sprinklers on a range or in a room	Maximum friction loss including changes in direction (see Note) bar	For range and distribution pipe loss, see:
≤ 3	0,9	Table 29 columns 2 and 3
≥ 4	0,7	Table 29 column 3
≥ 3 in a single line, in a narrow room or range at a roof apex	0,7	Table 29 column 3
NOTE In buildings with more than one floor, the pressure loss can be increased by an amount equivalent to the static pressure between the level of the sprinklers concerned and the level of the sprinklers on the highest floor.		

13.3.3.3 If there are more than two sprinklers on a range pipe, the pressure loss between the 2-sprinkler point and the distribution pipe shall be determined by using the pressure loss given in column 2 of Table 29. The pressure loss in the distribution pipe between this connection and the control valve set shall be determined by the pressure loss per metre given in column 3 of Table 29.

NOTE Figure 17 shows an example of a pipe layout in a LH installation with design points from which the piping is to be fully calculated.

Table 29 — Pressure loss for design flow rates in LH installations

Diameter mm	Loss of pressure in pipe mbar/m	
Column 1	Column 2 (100 l/min)	Column 3 (225 l/min)
25	44	198
32	12	52
40	5,5	25
50	1,7	7,8
65	0,44	2,0

13.3.4 Ordinary Hazard - OH

13.3.4.1 Range pipe diameters shall conform to Table 30, and distribution pipe diameters shall conform to Table 31.

Table 30 — Range pipe diameters in OH installations

Range pipes	Layout	Diameter mm	Maximum number of sprinklers fed
Ranges at remote end of all distribution pipes - last 2 ranges	2-end-side layouts	25 32	1 2
last 3 ranges	3-end-side layouts	25 32	2 3
last range	All other layouts	25 32 40 50	2 3 4 9
All other range pipes	All	25 32 40 50	3 4 6 9

Table 31 — Distribution pipe diameters in OH installations

Distribution pipes	Layout	Diameter mm	Maximum number of sprinklers fed
At extremities of installation:	2-end-side	32 40 50 65	2 4 8 16
	All others	32 40 50 65	3 6 9 18
Between design points and the control valve set	All	To be calculated in accordance with 13.3.4.2	

When the range pipes run longitudinally under roofs sloping at an angle of more than 6°, the number of sprinklers on a range pipe shall not exceed six.

NOTE Figure 18 gives an example of a pipe layout in OH with the design points from which the piping is to be fully calculated.

13.3.4.2 The pipe diameters between the design point in the most remote area of the installation and the control valve set shall be calculated to ensure that the total pressure loss due to friction with a flow of 1000 l/min does not exceed 0,5 bar, except as modified in 13.3.4.3 and 13.3.4.4.

13.3.4.3 In buildings with more than one floor, or where there are a number of different levels, e.g. platforms or lean-to's, the 0,5 bar loss in pressure from the design point may be increased by an amount equivalent to the static pressure due to the height difference between the highest sprinkler point in the building and the remote area design point on the floor concerned.

In these cases, the height difference between the highest sprinkler level and the installation pressure gauge shall be indicated on the completion certificate, together with the pressure required at the installation pressure gauge.

13.3.4.4 Where the same system includes both OH3 or OH4 and HHP or HHS areas, all connected to a common water supply, the maximum friction loss of 0,5 bar may be increased by 50% of the available extra pressure, as indicated in the following example for OH3.

EXAMPLE (for an OH3 installation):

Pressure required at the control valve set excluding static pressure (Table 6 for OH3)	1,4 bar
Pressure difference due to the difference in height between the highest sprinkler and the control valve set	1,2 bar
Required pressure at the control valve set	2,6 bar
Pressure available at the control valve set for the flow appropriate in HH e.g.	6,0 bar
Extra pressure which may be used:	
50% of (6,0 - 2,6) =	1,7 bar.

The pipework shall be sized to allow for a maximum pressure loss of:

$0,5 + 1,7\ (1000/1350)^2 =$ 1,43 bar

13.3.5 High hazard - HHP and HHS (except intermediate level sprinklers)

13.3.5.1 The pipe shall be sized according to:

— the design density;

— the spacing of the sprinklers;

— the K-factor of sprinkler used;

TB231.2.2 — the pressure/flow characteristic of water supply.

No pipe shall have a nominal diameter of less than 25 mm.

13.3.5.2 For installations with water supplies which conform to Table 7 (1) and with sprinklers having a K-factor of 80, the pipe sizes for range pipes and distribution pipes shown in Tables 32 and 33 shall apply.

No more than four sprinklers shall be installed on any range pipe. Range pipes shall not be connected to distribution pipes of more than 150 mm in diameter.

NOTE Figure 19 gives an example of a pipe layout in accordance with Tables 32 and 33 and design points from which the pipe diameters are to be fully calculated.

Table 32 — Range pipe diameters for HH installations with pressure and flow characteristics as given in Table 7 (1 or 2)

Range pipe	Layout	Diameter mm.	Maximum number of sprinklers fed by pipe
Ranges at remote end of all distribution pipes:	2-end-side layouts, last two ranges	25 32	1 2
	3-end-side layouts, last three ranges	25 32	2 3
	All other layouts, last range only	25 32 40	2 3 4
All other ranges	Any	25 32	3 4

Table 33 — Distribution pipe diameters downstream of the design point, in HH installations with pressure and flow characteristics as given in Table 7 (1)

Distribution pipes	Diameter mm.	Maximum number of sprinklers fed by distribution pipe
Pipes at extremities of installation	32 40 50 65 80 100	2 4 8 12 18 48
Pipes between the design points and the control valve set	To be calculated in accordance with 13.3.5	

TB231.2.2

13.3.5.3 For installations with water supplies, which conform to Table **7** (2) or as modified by **7**.3.2.6 and with sprinklers having a K-factor of 80, the sizes for range pipes and distribution pipes shall be determined from Tables 32 and 34.

No more than four sprinklers shall be installed on any range pipe. No range pipe shall be connected to a distribution pipe exceeding 150 mm in diameter. Distribution pipes less than 65 mm diameter shall not be used in 4-end-side systems.

NOTE Figure 20 gives an example of a pipe layout in accordance with Tables 32 and 34 and design points from which the pipe diameters are to be fully calculated.

Table 34 — Distribution pipe diameters downstream of the design point in HH installations with pressure and flow characteristics as given in Table 7 (2, 3 or 4)

Distribution pipes	Diameter mm.	Maximum number of sprinklers on distribution pipes
Pipes at extremities of system	50 65 80 100 150	4 8 12 16 48
Pipes between the design points and the control valve set	To be calculated in accordance with 13.3.5	

13.3.5.4 For installations with water supplies which conform to the requirements shown in Table 7 (3) and with sprinklers having a K-factor of 80, and as shown in Table 7 (4) with sprinklers having a K-factor of 115, the sizes for range pipes and distribution pipes shall be determined from Tables 34 and 35.

In an end-side arrangement, no more than six sprinklers shall be fitted to any range pipe. In a 2-end-centre layout, no more than four sprinklers shall be fitted to any range pipe. Range pipes shall not be connected to a distribution pipe more than 150 mm in diameter. Distribution pipes less than 65 mm diameter shall not be used in 4-end-side systems.

TB231.2.2 NOTE Figure 21 gives an example of a pipe layout in accordance with Tables 34 and 35 and design points from which the pipe diameters are to be fully calculated.

Table 35 — Range pipe diameters for HH installations with pressure and flow characteristics as given in Table 7 (3 or 4)

Range pipes	Layout	Diameter mm.	Maximum number of sprinklers fed by pipe
Ranges at remote end of all distribution pipes	End-side, last three ranges	40 50 65	1 3 6
Other ranges		32 40 50 65	1 2 4 6
Ranges at remote end of all distribution pipes	2-end-centre, last three ranges	32 40	1 2
Other ranges		32	2
All ranges	3 and 4 end-centre	32 40 50	1 2 4

TB231.2.2

13.3.5.5 The pressure loss between the design points and the control valve set shall be determined by calculation. The pressure loss with the flows shown in Table 7, plus the necessary pressure at the design point, plus the static pressure equal to the height difference between the highest sprinkler and the control valve set, shall not exceed the available pressure.

Where the highest sprinkler is upstream of the design point, the portion requiring the higher static head shall have its own distribution pipe.

The pressure loss in the distribution pipes feeding each section of the risk may be balanced by suitably sizing the distribution pipe.

A1

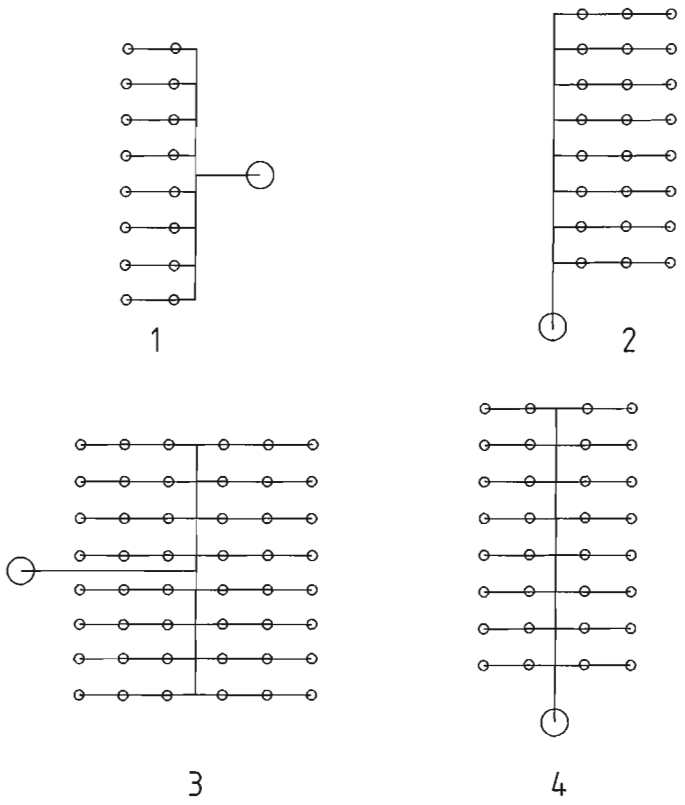

A1

Key
1 2-end-side with central feed
2 3-end-side with end feed
3 3-end-centre with central feed
4 2-end-centre with end feed

Figure 16 — Examples of range pipe arrays

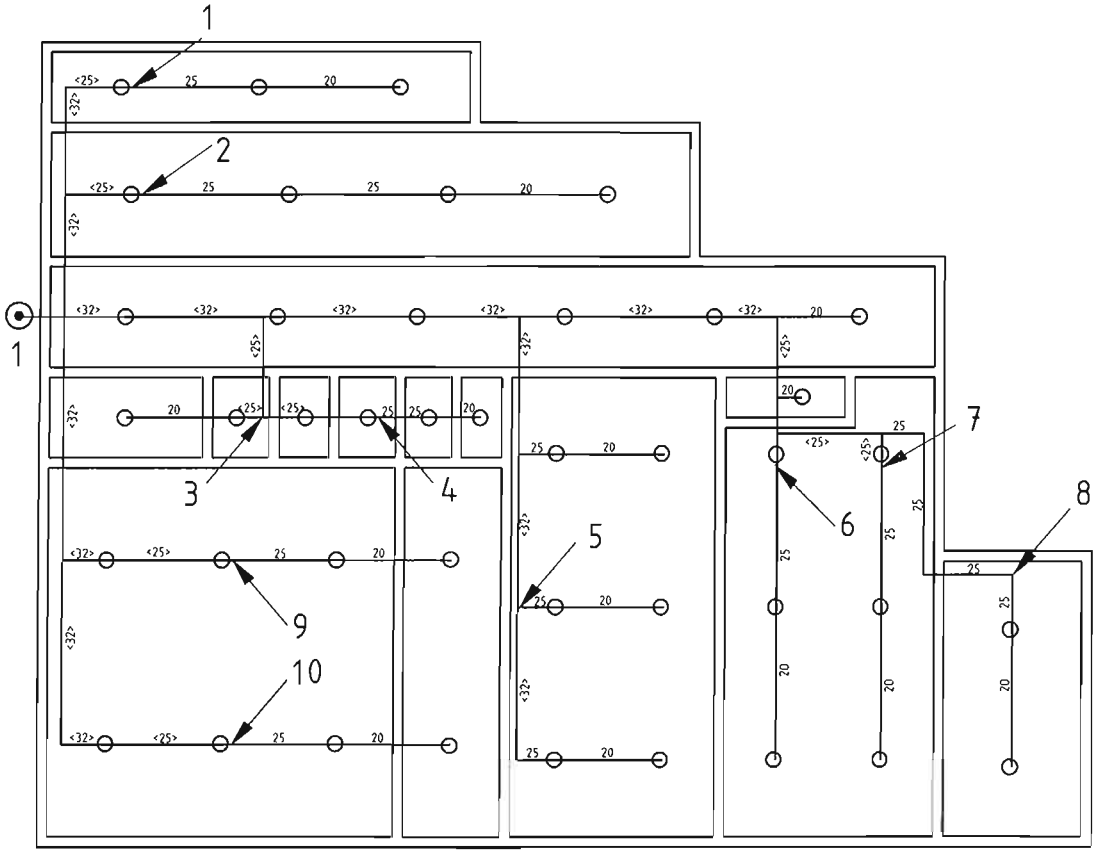

Key

[A1⟩ A control valve set ⟨A1]

Pressure loss between control valve set and: 1 (2 sprinkler point) = 0,7 bar
2 (3 sprinkler point) = 0,7 bar
3, 4,5, 6, 7, 8, 9 and 10 (2s sprinkler point) = 0,9 bar

Dimensions shown as <25> or <32> indicate probable pipe sizes resulting from calculation

Pipe sizes are in millimetres

Figure 17 — Example of application of design points in a LH installation

Dimensions in millimetres

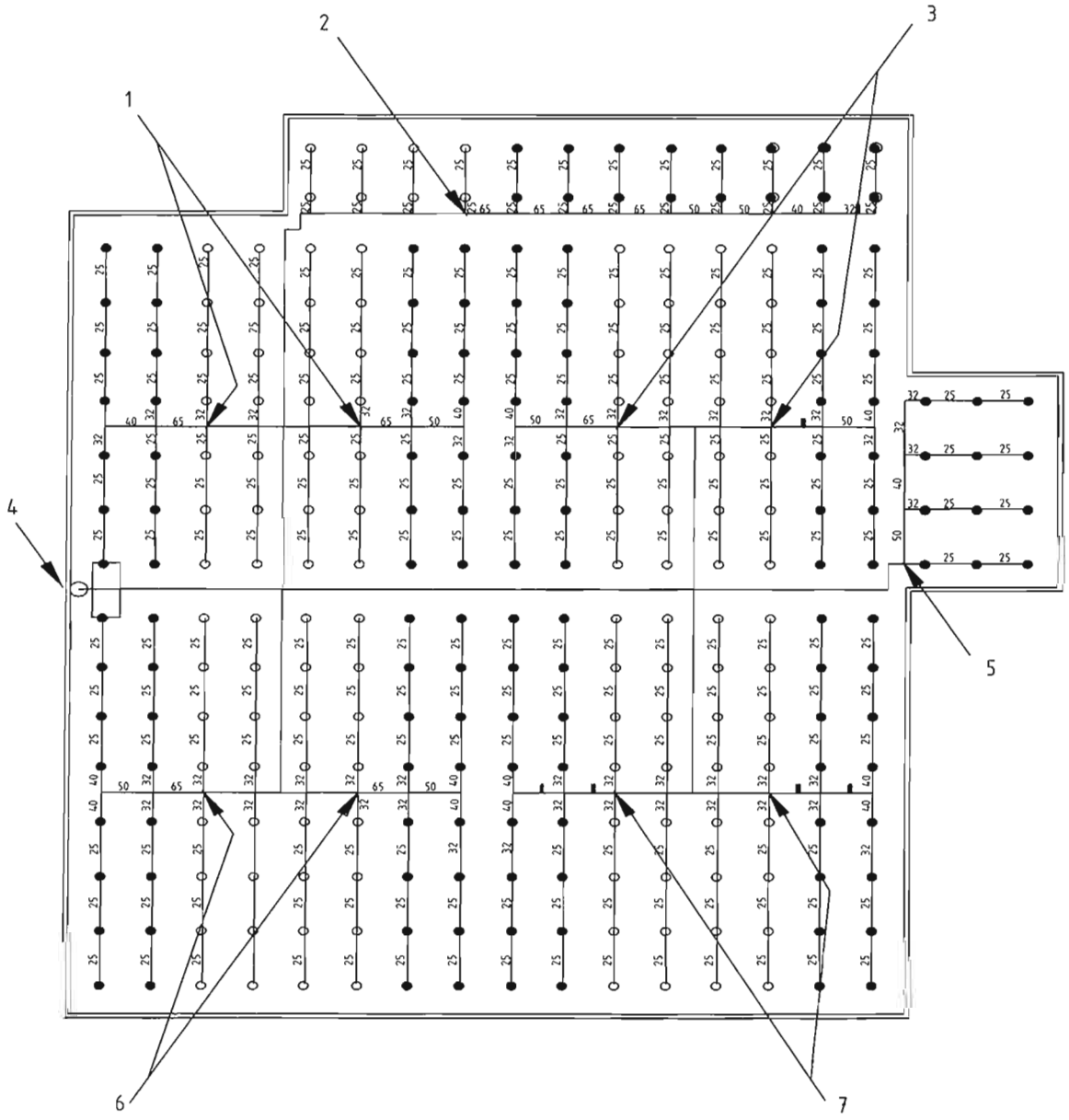

Key

1, 2, 3, 5, 6 and 7 design points

4 control valve set

Figure 18 — Example of application of design points (1 to 7) in an OH installation

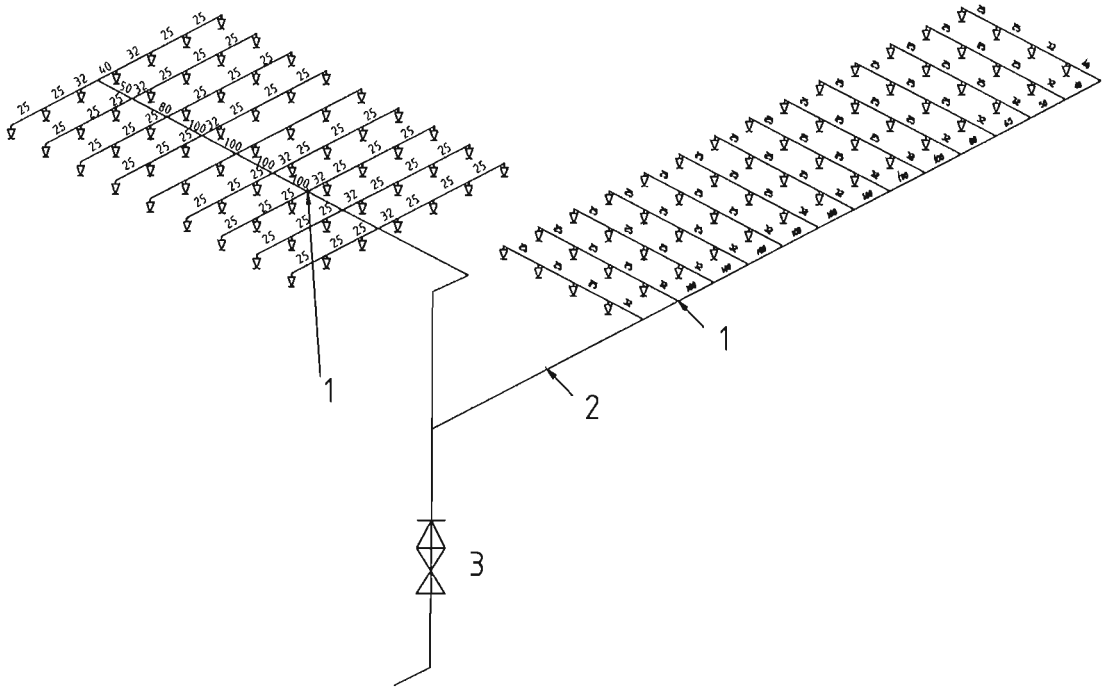

Key

1 48 Sprinkler point
2 Distribution pipe spur
3 Control valve set

Figure 19 — Example of application of design points in a high hazard installation with pipe sizes from Tables 32 and 33

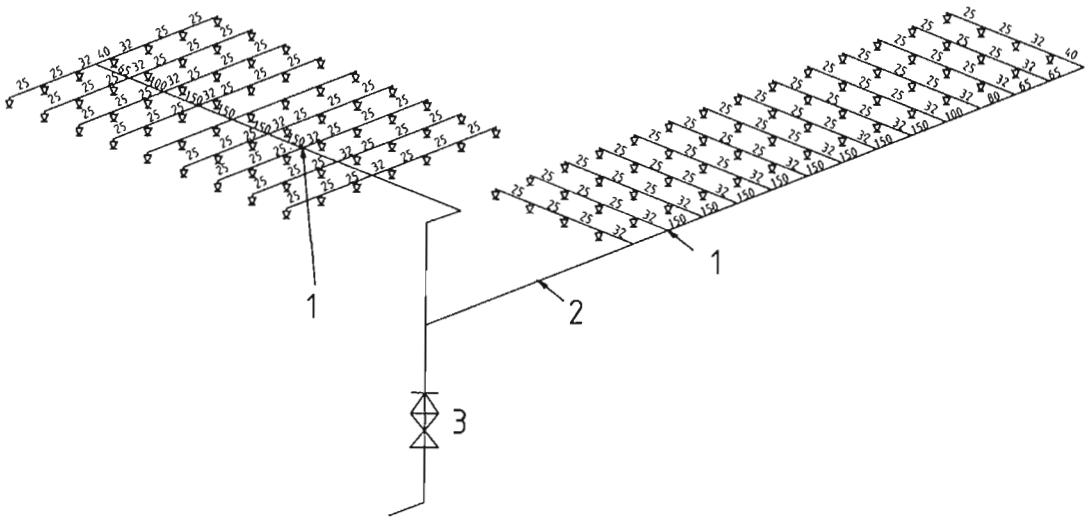

Key

1 48 Sprinkler point
2 Distribution pipe spur
3 Control valve set

Figure 20 — Example of application of design points in a high hazard installation with pipe sizes from Tables 32 and 34

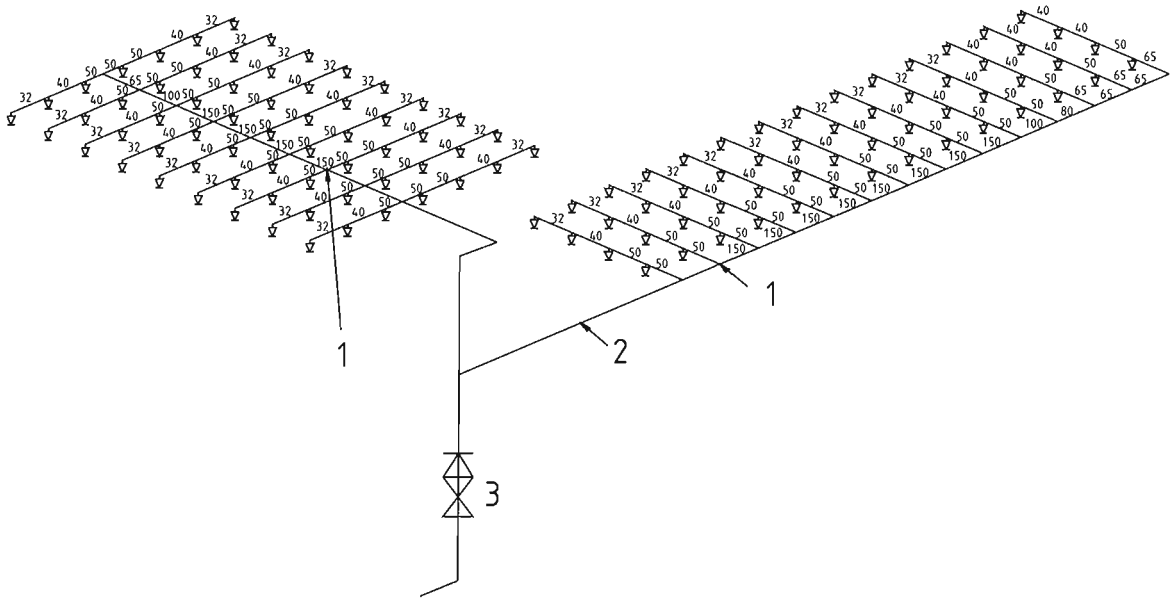

Key

1 48 Sprinkler point
2 Distribution pipe spur
3 Control valve set

Figure 21 — Example of application of design points in a high hazard installation with pipe sizes from Tables 34 and 35

13.4 Fully calculated systems

13.4.1 Design density

The density of discharge shall be taken as the total flow in litres per minute from a group of four sprinklers which are most closely adjacent, divided by the area in square metres covered by the four sprinklers, or, where fewer than four sprinklers are in open communication, the density of discharge shall be taken as the lowest value of the flow from any sprinkler divided by the area covered by the sprinkler.

The density of discharge from each area of operation, or the entire protected area, whichever is the smaller, containing the relevant group of four sprinklers, with each water supply or supply combination available, shall be not less than the design density specified in clause 7.

The area covered by each sprinkler shall be defined by the centre-lines drawn midway between adjacent sprinklers at right angles to the line joining the sprinklers and by the boundary of the area covered or half the distance to the closest sprinkler, whichever is the greater (see Figure 22). Where in-rack sprinklers are installed, the calculation shall be carried out taking into account the simultaneous flow and pressure requirement for roof or ceiling sprinklers and the intermediate level sprinklers.

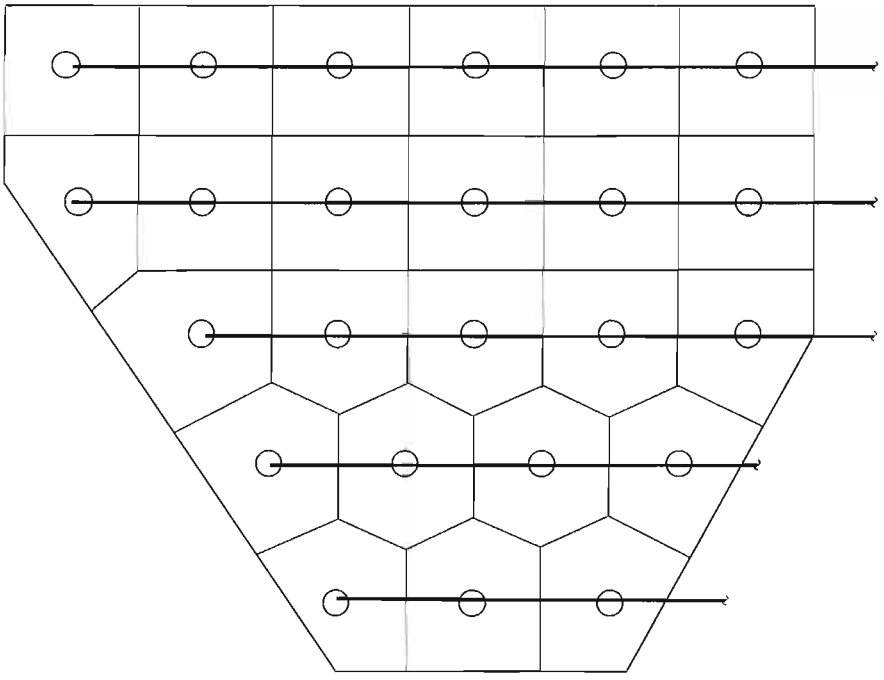

Figure 22 — Determination of area covered per sprinkler

13.4.2 Locations of the area of operation

13.4.2.1 Hydraulically most unfavourable location

Variations in sprinkler spacing, layout, elevation, range centres, sprinkler orifice size and pipe sizes, as well as all possible locations, whether on the distribution pipes or between distribution pipes where these are connected by range pipes, shall be considered when determining the hydraulically most unfavourable location of the area of operation (See Figures 23, 25 and 26).

The correct position of the hydraulically most unfavourable area of operation in gridded installations shall be proved by displacing the area of operation by one sprinkler pitch in each direction along the range pipes until the area with the highest pressure requirement is identified.

The correct position of the hydraulically most unfavourable area of operation in looped installations shall be proved by displacing the area of operation by one sprinkler pitch in each direction along the distribution pipe until the area with the highest pressure requirement is identified.

13.4.2.2 Hydraulically most favourable location

All possible locations, whether on the distribution pipes, or between distribution pipes where these are connected by range pipes, shall be considered when determining the hydraulically most favourable location of the area of operation (See Figures 23 to 26).

13.4.3 Shape of the area of operation

13.4.3.1 Hydraulically most unfavourable location

The area of operation shall be as near as possible rectangular, symmetrical with respect to the sprinkler layout (see Figure 23) and as follows:

a) In the case of terminal and looped configurations, the far side of the area shall be defined by the range, or pair of ranges where there is an end-centre layout. Sprinklers not constituting a full range or pair of ranges shall be grouped as close as possible to the distribution pipe on the next upstream range row to the rectangular area (see Figures 23 and 25);

b) In the case of gridded configurations where ranges run parallel to the ridge of a roof having a slope greater than 6°, or along bays formed by beams greater than 1,0 m deep, the far side of the area shall have a length *L* parallel to the ranges, such that *L* is greater than or equal to two times the square root of the area of operation;

c) In the case of all other gridded configurations the far side of the area shall have a length *L* parallel to the ranges, such that *L* is greater than or equal to 1,2 times the square root of the area of operation.

13.4.3.2 Hydraulically most favourable location

The area of operation shall be as near as possible square and as follows:

a) In the case of terminal and looped configurations, the area shall where possible include sprinklers on one distribution pipe only. The number of sprinklers calculated to be operating on ranges, or pairs of ranges in end-centre installations, shall be located on each range or pair of ranges at the hydraulically most favourable location. Sprinklers not forming a full range or pair of ranges shall be located on the next range row at the hydraulically closest locations (see Figures 24 and 26).

b) In the case of gridded configurations, the area shall be located on ranges at the hydraulically most favourable location. Sprinklers not forming a full range length shall be located on the next range row at the hydraulically closest locations (see Figure 23).

A1

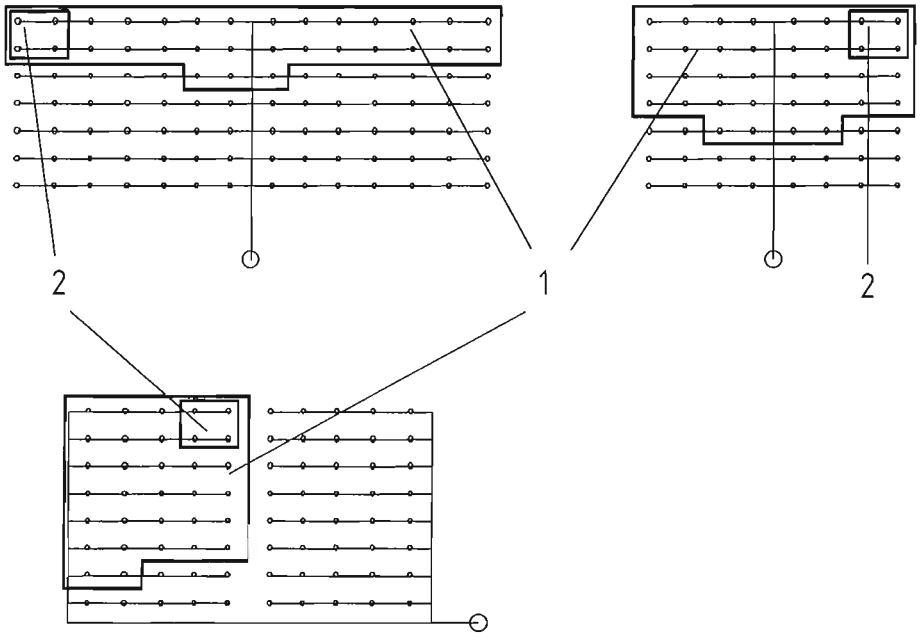

Key

1 most unfavourable area

2 four sprinkler under consideration A1

Figure 23 — Most unfavourable areas of operation in one-sided and two-sided pipe layouts

A1

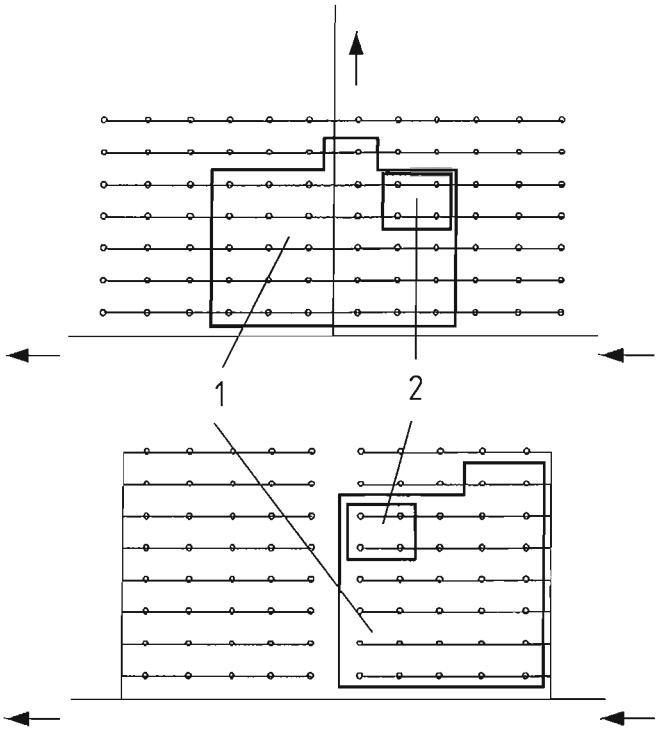

Key

1 most favourable area

2 four sprinkler under consideration A1

Figure 24 — Most favourable areas of operation in one-sided and two-sided pipe layouts

A1

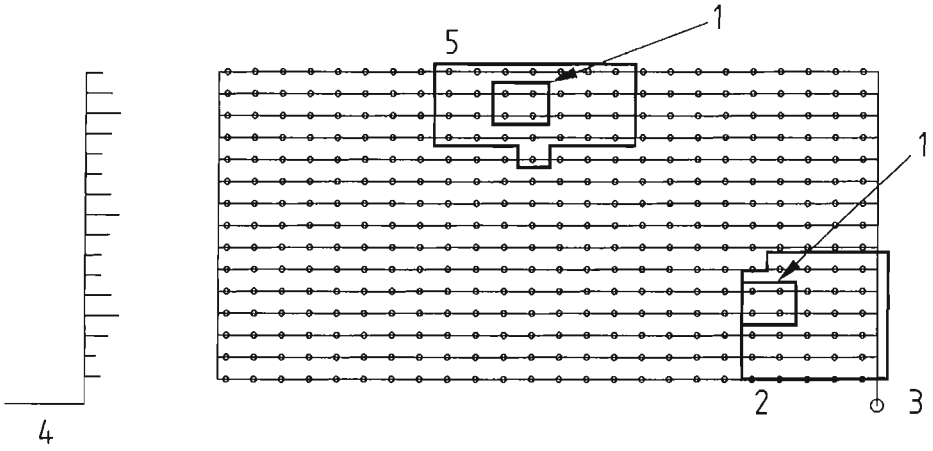

Key

1 four sprinklers under consideration

2 most favourable area

3 riser

4 elevation

5 most unfavourable area A1

Figure 25 — Most favourable and unfavourable areas of operation in gridded pipe layout

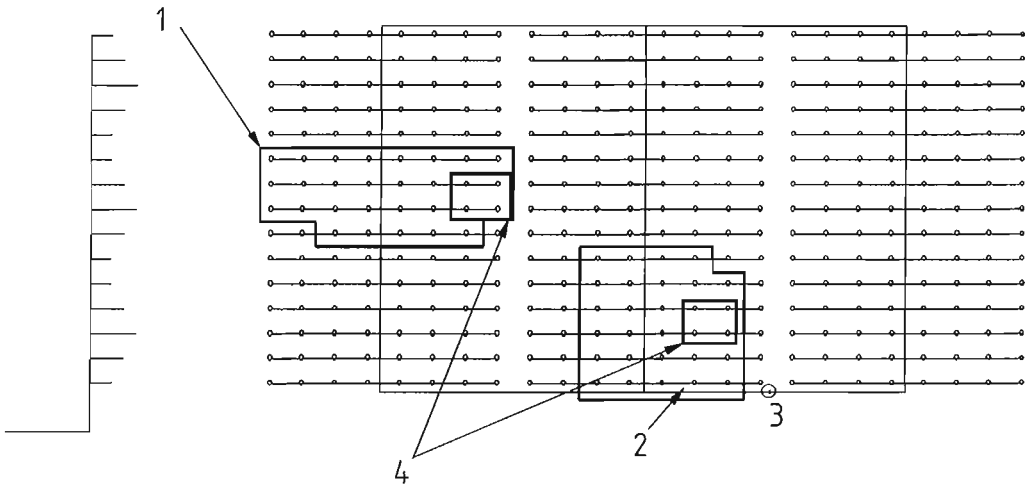

Key
1 Most unfavourable area
2 Most favourable area
3 Riser
4 Four sprinklers under consideration

Figure 26 — Most favourable and unfavourable areas of operation in a looped pipe layout

TB229.3.8

13.4.4 Minimum sprinkler discharge pressure

The pressure at the hydraulically most unfavourably situated sprinkler, when all the sprinklers in the area of operation are in operation, shall be not less than that required to achieve the density specified in 13.4.1 or the following, whichever is the higher:

— 0,70 bar in LH;

— 0,35 bar in OH;

— 0,50 bar in HHP and HHS except for in-rack sprinklers;

[A1]

— 1,00 bar for K 115 in-rack sprinklers; [A1]

— 2,00 bar for in-rack sprinklers.

13.4.5 Minimum pipe diameters

The pipe diameter shall not be less than as shown in Table 36.

Table 36 — Minimum pipe diameters

Risk	Diameter mm
LH	20
OH and HH horizontal and upright pipe connecting one sprinkler having a K factor not greater than 80	20
All others	25

Pipe diameters on the installation side of the control valve set may decrease only in the direction of water flow, except in the case of grid and loop configurations.

Upright sprinklers shall not be connected to any pipe with a diameter greater than 65 mm, or 50 mm if lagged. Pendent sprinklers shall not be directly connected to any pipe with a diameter greater than 80 mm. For larger diameters an arm pipe shall be fitted so that the distance from the sprinkler deflector to the edge of the main pipe is not less than 1,5 times the diameter of this pipe.

14 Sprinkler design characteristics and uses

14.1 General

NOTE This standard covers only the use of the types of sprinkler specified in EN 12259-1.

Only new (i.e. unused) sprinklers shall be used. They shall not be painted except as allowed by EN 12259-1. They shall not be altered in any respect or have any type of ornamentation or coating applied after dispatch from the production factory, except as specified in 14.9. TB201

14.2 Sprinkler types and application

14.2.1 General

TB207

Sprinklers shall be used for the various hazard classes in accordance with Table 37, and as specified in 14.2.2 to 14.2.4.

Table 37 — Sprinkler types and K factors for various hazard classes

Hazard class	Design Density mm/min	Sprinkler type	Nominal K factor
LH	2,25	conventional, spray, ceiling, flush, flat spray, recessed, concealed, and sidewall	57
OH	5,0	conventional, spray, ceiling, flush, flat spray, recessed, concealed, and sidewall	80
HHP and HHS ceiling or roof sprinklers	≤ 10	conventional, spray	80 or 115
	> 10	conventional, spray	115
HHS intermediate sprinklers in high piled storage		conventional, spray, and flat spray	80 or 115

TB207

14.2.2 Ceiling, flush, recessed and concealed pattern.

Ceiling, flush, recessed and concealed sprinklers shall not be installed in OH4, HHP or HHS areas.

Sprinklers without fixed deflectors, e.g. with retracted deflectors which drop to the operating position on actuation, shall not be fitted in the following situations:

a) where the ceiling is more than 45° from the horizontal;

b) in situations where the atmosphere is corrosive or likely to have a high dust content;

c) in racks or under shelves.

14.2.3 Sidewall pattern

Sidewall sprinklers shall not be installed in HH installations or OH storage areas or above suspended ceilings. They may only be installed under flat ceilings.

Sidewall sprinklers shall be used only in the following cases:

a) in LH, OH1, OH2 and OH3 without storage;

b) OH3 storage risks;

c) For the protection of corridors, cable ducts and columns in HH.

TB207

14.2.4 Flat spray pattern

Flat spray sprinklers shall be used only in concealed spaces, above suspended open ceilings and in racks.

14.3 Flow from sprinklers

The water flow from a sprinkler shall be calculated from the following equation:

$$Q = K \, x \sqrt{P}$$

where:

Q is the flow in litres per minute;

K is the constant given in Table 37;

P is the pressure in bar.

14.4 Sprinkler temperature ratings

Sprinklers shall be chosen with a temperature rating close to but no lower than 30°C above the highest anticipated ambient temperature.

In unventilated concealed spaces, under skylights or glass roofs etc., it may be necessary to install sprinklers with a higher operating temperature, up to 93°C or 100°C. Special consideration shall be given to the rating of sprinklers in the vicinity of drying ovens, heaters and other equipment, which gives off radiant heat.

NOTE 1 Under normal conditions in temperate climates a rating of 68°C or 74°C is suitable.

NOTE 2 Sprinklers are colour coded in accordance with EN 12259-1 to indicate their temperature rating as follows:

Bulb	° C	Fusible link	°C
orange	57	-	-
red	68	uncoloured	68/74
yellow	79	-	-
green	93	white	93/100
blue	141	blue	141
mauve	182	yellow	182
black	204/260	red	227

14.5 Sprinkler thermal sensitivity

TB207

14.5.1 General

Sprinklers of different sensitivities shall be used in accordance with Table 38. Where sprinklers are situated in racks, the sprinklers at the ceiling shall have a sensitivity equal to or of slower response than the sprinklers situated in the racks.

TB207

Table 38 — Sprinkler sensitivity ratings

Sensitivity rating	In-rack	Ceiling above in-rack sprinklers	Dry systems Pre-action Type A	All others
Standard 'A'	No	Yes	Yes	Yes
Special	No	Yes	Yes	Yes
Quick	Yes	Yes	No	Yes
NOTE When new sprinklers are added to an existing sprinkler installation, it can be necessary to take into account the effect of different sensitivities in order to avoid excessive activations.				

NOTE Most types of sprinkler are rated, in descending order of sensitivity, as one of the following types (see EN 12259-1):

— Quick response;

— Special response;

— Standard response 'A'.

14.5.2 Interaction with other measures

Account shall be taken of possible interaction between sprinkler systems and other measures. Consequently the responsivity of sprinkler systems shall not be inhibited.

The effective functioning of other fire safety measures may depend on the most effective operation of sprinkler equipment, and in such instances the total fire safety measures shall not be impaired. Particular attention shall be given to this aspect when High Hazard systems are involved.

The effective functioning of sprinkler systems depends on the early suppression or control of fire in the early stages. Except when located in racks, sprinklers are normally operated by the flow of hot combustion gases from the fire horizontally across the sprinklers. Consequently, nothing shall interfere with this horizontal flow of combustion gases.

14.6 Sprinkler guards

When sprinklers, other than ceiling or flush sprinklers, are installed in a position at risk of accidental mechanical damage, they shall be fitted with a suitable metal guard.

14.7 Sprinkler water shields

Sprinklers installed in racks, or under perforated shelves, platforms, floors or similar locations, where water from a higher sprinkler or sprinklers may cause wetting close to the bulb or fusible element, shall be fitted with a metal water shield with a diameter of between 0,075 m and 0,15 m.

Water shields on upright sprinklers shall not be attached directly to the deflector or yoke, and any bracket supports shall be designed so as to minimize obstruction to the sprinkler water distribution.

14.8 Sprinkler rosettes

Rosettes shall be made of metal or thermosetting plastic.

Rosettes shall not be used to support ceilings or other structures.

No part of a rosette shall project from the ceiling below the top of the visible portion of the heat sensitive element of the sprinkler.

14.9 Corrosion protection of sprinklers

[A2] Sprinklers installed in premises where corrosive vapours are prevalent shall be protected with a suitable corrosion resistant coating applied by the supplier in conformity with EN 12259-1 unless the sprinkler are manufactured from suitably corrosion resistant materials. [A2]

The anti-corrosion treatment shall not be applied to sprinkler bulbs.

15 Valves

TB201
TB232

15.1 Control valve set

Each installation shall have a control valve set in accordance with EN 12259-2 or EN 12259-3.

15.2 Stop valves

All stop valves which may cut off the water supply to the sprinklers shall:

— close in the clockwise direction;

— be fitted with an indicator that clearly shows whether it is in the open or closed position;

— be secured in the right position by a strap and padlock or secured in an equivalent manner.

Stop valves may not be installed downstream of the control valve set except as specified in this standard.

Care shall be taken to ensure that all stop, test, drain and flushing valves are suitable for the system pressures, especially in locations such as high-rise buildings, where high static pressures are likely.

TB232

15.3 Ring main valves

Where sprinkler systems are fed by a ring main supply pipe arrangement on the premises, stop valves shall be installed to isolate the ring into sections, in such a way that no section shall include more than 4 control valve sets.

15.4 Drain valves

Drain valves shall be fitted as specified in Table 39 to allow drainage from pipework as follows:

a) immediately downstream of the control valve set or of its downstream stop valve if fitted;

b) immediately downstream of any subsidiary alarm valve;

c) immediately downstream of any subsidiary stop valve;

d) between a dry pipe or subsidiary control valve set and any subsidiary stop valve installed for testing;

e) any pipe, with the exception of drop pipes to single sprinklers in a wet installation, which cannot be drained through another drain valve.

The valves shall be fitted at the lower end of the pipework and sized as specified in Table 39. The outlet shall be no more than 3 m above the floor and shall be fitted with a [A2⟩ suitable plug ⟨A2].

Table 39 — Minimum size of drain valves

Valve principally draining:	Minimum diameter of valve and pipe mm
LH installation	40
OH or HHP or HHS installation	50
Subsidiary installation	50
A zone	50
Trapped distribution pipes, diameter ≤ 80	25
Trapped distribution pipes, diameter > 80	40
Trapped range pipes	25
Trapped pipework between dry or subsidiary alarm valve and a subsidiary stop valve installed for testing purposes	15

TB232

15.5 Test valves

15.5.1 Alarm and pump start test valves

15 mm test valves shall be fitted, as appropriate, to test the following:

a) the hydraulic alarm and any electric alarm pressure switch by drawing water from the immediate downstream side of the following:

— a wet alarm valve, and any downstream main stop valves;

— an alternate alarm valve;

b) the hydraulic alarm and any electric alarm pressure switch by drawing water downstream of the main water supply stop valve and from the upstream side of:

— an alternate alarm valve;

— a dry pipe alarm valve;

— a pre-action alarm valve.

c) any water flow alarm switch installed downstream of the control valve set by drawing water downstream of the water flow alarm;

d) an automatic pump starting device;

e) any pump or pressure tank house sprinkler alarm flow switch installed upstream of the control valve set.

TB232

15.5.2 Remote test valves

A test facility shall be provided, incorporating a test valve with any associated fittings and pipework, delivering a flow equivalent to the discharge from a single sprinkler, connected at the hydraulically most remote location on a distribution pipe.

TB208.3.4
TB219.4
TB232

15.6 Flushing connections

Flushing connections, with or without permanently installed valves, shall be fitted on the spur ends of the installation distribution pipes.

[A2] Flushing connections shall be of the same size as the distribution pipe. For pipes bigger than DN 40 flushing connections of DN 40 may be used, if connected to the lower side of the distribution pipe. Flushing connections shall be fitted with a suitable plug. [A2]

It may be desirable in certain cases to fit flushing connections on ranges, e.g. in the form of a blank tee.

In addition to their use for periodic flushing of the pipework, flushing connections may be used to check that water is available and for carrying out pressure and flow tests.

Pipework, which is completely full of water, may be damaged by the increase in pressure due to temperature rises. If complete venting of air in an installation is likely to occur, e.g. in the case of a gridded layout with flushing connections at the extremities, consideration shall be given to the fitting of pressure relief valves.

TB232

15.7 Pressure gauges

15.7.1 General

Pressure gauge scale divisions shall not exceed:

a) 0,2 bar for a maximum scale value less than or equal to 10 bar;

b) 0,5 bar for a maximum scale value greater than 10 bar.

The maximum scale value shall be of the order of 150% of the maximum pressure.

TB210.5.2
TB232

15.7.2 Water supply connections

Each town main connection shall be fitted with a pressure gauge between the supply pipe stop valve and the non-return valve, ('A' gauge).

TB210.5.2
TB232

Each pump supply shall be fitted with a damped pressure gauge on the supply pipe immediately downstream of the outlet non-return valve and upstream of any outlet stop valve.

15.7.3 Control valve set

TB210.5.2
TB232

A pressure gauge shall be fitted at each of the following locations:

a) immediately upstream of each control valve set, ('B' gauge);

b) immediately downstream of each control valve set, ('C' gauge);

c) immediately downstream of each alternate or dry subsidiary control valve set, but upstream of any stop valve.

The B gauge on dry alarm valves shall have an indicator showing the maximum pressure attained.

15.7.4 Removal

Means shall be provided to enable each pressure gauge to be removed without interruption of the water or air supply to the installation.

TB232

16 Alarms and alarm devices

16.1 Water flow alarms

16.1.1 General

TB201
TB232

Each control valve set shall be provided with a water motor alarm in accordance with EN 12259-4 and an electrical device for remote alarm indication, both located as close as possible to the alarm valve. A single alarm motor and gong may be installed common to a group of wet alarm valves provided that these are situated in the same valve room and an indicator is fitted to each alarm valve to show when it is operating.

Each water motor alarm gong shall be prominently marked with the number of the installation.

16.1.2 Water motor and gong

The water motor shall be installed in such a way that the gong is on the outside of an exterior wall and with its centre line not higher than 6 m above the point of connection to the alarm valve. A strainer, readily accessible for cleaning, shall be fitted between the motor nozzle and the alarm valve connection. The water outlet shall be arranged so that any flow of water can be seen.

TB232

16.1.3 Piping to water motor

The piping shall be 20 mm diameter galvanized steel or non-ferrous metallic material. The equivalent length of pipe between the alarm valve and the water motor shall be no more than 25 m assuming an equivalent length of 2 m for each change of direction.

The pipe shall be fitted with a stop valve located within the premises and shall be provided with a permanent drain through an orifice of no more than 3 mm in diameter. The orifice plate may be integral with the pipe fitting, and shall be made either of stainless steel or of a non-ferrous material.

16.2 Electrical water flow and pressure switches

16.2.1 General

TB201
TB232

Electrical devices to detect the operation of sprinkler systems shall be either water flow switches conforming to EN 12259-5 or pressure switches.

16.2.2 Water flow alarm switches

TB232

Water flow alarm switches shall only be used in wet installations. A test connection shall be fitted downstream of each switch to simulate the operation of a single sprinkler. It shall be fitted with a drain. The draw-off pipe shall be galvanized steel or copper.

The pressure/flow characteristic of the fully opened test valve and draw-off pipe shall be equal to that of the smallest nominal bore sprinkler supplied through the flow switch. Any orifice plate shall be at the pipe outlet and shall be either stainless steel or non-ferrous material.

The test pipe outlet shall be positioned relative to the drainage system in such a way that the flow of water can be seen during tests.

16.2.3 Dry and pre-action systems

TB208.5.4
TB232

Each installation shall be provided with a low air/gas pressure alarm, to provide a visual and audible warning in accordance with annex I.

16.3 Fire brigade and remote central station alarm connection

TB209.9.8
(for ESFR)
TB232

The equipment for automatic transmission of alarm signals from a sprinkler installation to a fire brigade or remote manned centre shall be capable of being checked for:

a) continuity of the connection;

b) continuity of the connection between the alarm switch and the control unit.

NOTE If a direct connection to the fire brigade exists, the testing procedure should be agreed with the authorities in order to avoid false calls.

17 Pipework

17.1 General

17.1.1 Underground piping

TB227

Pipes shall be laid in accordance with the supplier's recommendations and shall have sufficient corrosion resistance.

NOTE The following types of pipe are recommended: cast iron, ductile iron, spun cement, reinforced glass fibre, polyethylene high density.

Adequate precautions shall be taken to prevent damage to piping, for example by passing vehicles.

17.1.2 Above ground piping

[A2] Piping downstream of control valves shall be steel, copper (see 17.1.10) or other material in accordance with appropriate specifications valid in the place of use of the system. When steel pipes with a nominal diameter equal to or less than 150 mm are threaded, cut-grooved or otherwise machined, they shall have a minimum wall thickness in accordance with ISO 65M. When steel pipe ends are formed without significantly reducing the wall thickness, e.g. by roll-grooving or pipe end preparation for welding, they shall have a minimum wall thickness in accordance with ISO 4200 range D.

When mechanical pipe joints are used, the minimum wall thickness shall also be in accordance with the manufacturer's recommendations. [A2]

Copper pipes shall be in accordance with EN 1057.

NOTE For dry, alternate or pre-action installations, galvanized steel should preferably be used.

17.1.3 Welding of steel pipe

Pipes and fittings less than 50 mm in diameter shall not be welded on site except if the installer uses an automatic welding machine. In no case shall welding, flame cutting, soldering or any other hot work be carried out in situ.

Welding of sprinkler pipework shall be carried out in such a way that:

— all joints are welded continuously;

TB227 — the inside of the weld does not interfere with the flow of water;

— the piping is deburred and the slag removed.

Welders shall be approved in accordance with EN 287-1.

17.1.4 Flexible pipes and joints

If relative movement is likely to occur between different sections of pipework within the sprinkler system, e.g. owing to expansion joints or in the case of certain types of racking, a flexible section or joint shall be fitted at the point of connection to the distribution main. It shall meet the following requirements:

a) before installation, it shall be capable of withstanding a test pressure of four times the maximum working pressure or 40 bar, whichever is the greater, and shall not include parts which, when subject to fire, might impair either the integrity or the performance of the sprinkler system;

b) flexible pipes shall contain a continuous pressure-retaining stainless steel or non-ferrous metal inner tube;

   1) flexible pipes shall not be fitted in the fully extended position;

   2) flexible pipes and joints shall not be used to take up misalignment between a distribution main and the feed pipes to intermediate sprinklers.

17.1.5 Concealment

Pipes shall be installed in such a way that they are easily accessible for repairs and alterations. They shall not be embedded in concrete floors or ceilings.

NOTE Wherever possible, piping should not be installed in concealed spaces, which make inspection, repairs and modifications difficult.

17.1.6 Protection against fire and mechanical damage

Piping shall be installed in such a way that the pipes are not exposed to mechanical damage. Where pipes are installed above gangways with low headroom, or at intermediate levels, or in other similar situations, precautions shall be taken against mechanical damage.

Where it is unavoidable for water supply pipework to pass through an unsprinklered building, it shall be installed at ground level and shall be enclosed to protect against mechanical damage, with appropriate fire resistance.

17.1.7 Painting

Non-galvanized ferrous pipework shall be painted if environmental conditions make it necessary. Galvanized piping shall be painted wherever the coating has been damaged, e.g. by threading.

NOTE Extra protection may be needed for unusually corrosive conditions.

17.1.8 Drainage

Means shall be provided to enable all the pipework to be drained. Where this cannot be done through the drain valve at the control valve set, extra valves shall be fitted in accordance with 15.4.

In the case of dry, alternate and pre-action installations, range pipes shall have a slope towards the distribution pipe of at least 0,4% and distribution pipes shall have a slope towards the appropriate drain valve of at least 0,2%.

A2 NOTE In cold climates where severe freezing conditions are possible, it can be necessary to incorporate a slope on wet systems and to increase the slope for dry systems. A2

Range pipes shall only be connected to the side or top of distribution pipes.

17.1.9 Copper pipe

Copper pipes may be used only in wet pipe systems for LH, OH1, OH2 and OH3 downstream of any steel piping. Copper pipes shall be joined either by mechanical joints or by hard soldering, using fittings according to EN 1254.

For hard soldering, copper to copper joints and joints involving alloys of copper and zinc (brass) or copper, tin and zinc (gunmetal) shall be made according to EN ISO 3677. Hard solder connections shall only be carried out by properly trained personnel.

Copper to steel joints shall be flanged, using stainless steel bolts. Piping shall not be bent on site.

Precautions shall be taken to avoid galvanic corrosion.

TB227

17.2 Pipe supports

17.2.1 General

Pipe supports shall be fixed directly to the building or, if necessary, to machines, storage racks or other structures. They shall not be used to support any other installations. They shall be of the adjustable type in order to secure an even load-bearing capability. Supports shall completely surround the pipe and shall not be welded to the pipe or fittings.

TB201
TB227

The part of the structure to which the supports are secured shall be capable of supporting the pipework (see Table 40). Pipes greater than 50 mm diameter shall not be supported from corrugated steel sheet or aerated concrete slabs.

Distribution pipes and risers shall have a suitable number of fixed points to take account of axial forces.

No part of any support shall be made of combustible material. Nails shall not be used.

Supports for copper pipes shall be provided with a suitable lining with sufficient electrical resistance, in order to prevent contact corrosion.

17.2.2 Spacing and location

[A2] Supports shall be spaced no more than 4 m apart on steel pipe and 2 m apart on copper pipe except in the case of pipes of over 50 mm diameter, in which case these distances may be increased by 50 % provided that one of the following conditions is met: [A2]

— two independent supports are fitted directly to the structure;

— a support is used which is capable of bearing a load 50 % greater than that called for in Table 40.

When mechanical pipe joints are used:

— there shall be at least one support within 1 m of each joint;

— there shall be at least one support on each pipe section.

TB227

The distance from any terminal sprinkler to a support shall not exceed

— 0,9 m for 25 mm diameter piping;

— 1,2 m for piping greater than 25 mm diameter.

The distance from any upright sprinkler to a support shall not be less than 0,15 m.

Vertical pipes shall have additional supports in the following cases:

— pipes more than 2 m long;

— pipes more than 1 m long feeding single sprinklers.

Pipes that are at a low level or otherwise vulnerable to mechanical impact shall be separately supported except for the following cases:

— horizontal pipes less than 0,45 m long feeding individual sprinklers;

— drop or rise pipes less than 0,6 m long feeding individual sprinklers.

17.2.3 Design

Pipe supports shall be designed in accordance with the requirements of Table 40 and Table 41.

Table 40 — Design parameters for pipe supports

Nominal pipe diameter (d) mm	Minimum load capacity at 20°C (see note 1) kg	Minimum cross section (see note 2) mm^2	Minimum length of anchor bolt (see note 3) mm
$d \leq 50$	200	30 (M8)	30
$50 < d \leq 100$	350	50 (M10)	40
$100 < d \leq 150$	500	70 (M12)	40
$150 < d \leq 200$	850	125 (M16)	50

NOTE 1 When the material is heated to 200 °C the load bearing capacity should not deteriorate more than 25 %.

NOTE 2 The nominal cross section of threaded rods should be increased so that the minimum cross section is still achieved.

NOTE 3 The length of anchor bolts depends on the type used and the quality and type of material into which they are to be fixed. The values given are for concrete.

TB227

Table 41 — Minimum dimension of flat iron rods and clips

Nominal pipe diameter (d) mm	Flat iron rods		Pipe clips	
	galvanized mm	ungalvanized mm	galvanized mm	ungalvanized mm
$d \leq 50$	2,5	3,0	25 x 1,5	25 x 3,0
$50 < d \leq 200$	2,5	3,0	25 x 2,5	25 x 3,0

17.3 Pipework in concealed spaces

Where sprinkler protection is required in concealed spaces such as false ceilings and floors, the pipework shall be designed as follows:

TB223 (for EPEC) TB227 TB230

17.3.1 False ceilings above OH occupancies

Sprinklers above the ceiling may be fed from the same range pipes as the sprinklers below the ceiling. In pre-calculated systems, the sprinklers shall be taken cumulatively for the purposes of determining pipe diameters.

TB223 (for EPEC) TB227 TB230

17.3.2 All other cases

The sprinklers in the concealed space shall be fed from separate range pipes. In the case of pre-calculated systems, the diameter of distribution pipes feeding sprinklers both inside and outside the concealed space shall be not less than 65 mm.

18 Signs, notices, and information

18.1 Block plan

18.1.1 General

A block plan of the premises shall be placed close to a main entrance or elsewhere, where it can readily be seen by the fire brigade or others responding to an alarm. The plan shall show:

TB208.3.6

a) the installation number and the location of the corresponding control valve set and water motor alarm;

b) each separate area of hazard classification, the relevant hazard class and, where appropriate, the maximum storage height;

c) by means of colour shading or hatching the area covered by each installation and, if required by the fire brigade, indication of routes through the premises to those areas;

d) the location of any subsidiary stop valves.

TB221.12 (for schools)

18.2 Signs and notices

18.2.1 Location plate

A location plate of weather-resistant material and lettering shall be fixed on the outside of the external wall as close as practical to the entrance nearest the control valve set(s). The plate shall bear the wording

'SPRINKLER STOP VALVE'

in letters no less than 35 mm high, and

'INSIDE'

in letters no less than 25 mm high. The wording shall be in white letters on a red background.

18.2.2 Signs for stop valves

A sign shall be fitted close to the main and any subsidiary stop valves bearing the words

'SPRINKLER CONTROL VALVE'

The sign shall be rectangular with white letters no less than 20 mm high on a red background.

Where the stop valve is enclosed in a room with a door the sign shall be fixed on the outside of the door, and a second sign, bearing the words 'Keep locked shut', shall be fixed on the inside of the door. The second sign shall be circular with white letters no less than 5 mm high, on a blue background.

18.2.3 Control valve set

18.2.3.1 General

Where the sprinkler system comprises more than one installation each control valve set shall be prominently marked with the number identifying the installation it controls.

18.2.3.2 Fully calculated installations

In fully calculated installations a durable notice shall be fixed to the rise pipe next to each control valve set. The notice shall include the following information:

a) the installation number;

b) the hazard classification or classifications of the installation;

c) for each hazard class area within an installation:

   1) the design requirements (area of operation and density of discharge);

   2) the pressure-flow requirement at the 'C' gauge or flow test facilities for the most unfavourable and most favourable areas of operation;

   3) the pressure-flow requirement at the pump delivery pressure gauge for the most unfavourable and most favourable areas of operation;

   4) the height of the highest sprinkler above the level of the 'C' gauge;

   5) the height difference between the 'C' gauge and the pump delivery pressure gauge.

18.2.4 Water supply connections to other services

A label shall be fixed to stop valves controlling water supplies from sprinkler system supply pipes or trunk mains to other services; it shall be appropriately marked; e.g. 'Firefighting hose reels', 'Domestic water supply' in raised or embossed lettering.

18.2.5 Suction and booster pumps

18.2.5.1 General

A nameplate shall be fixed to each suction or booster pump, carrying the following information:

a) the output pressure in bar, and the corresponding rated speed and flow in litres per minute, at the inlet condition and flow rating specified in Table 16;

b) the maximum power absorbed at the relevant speed at any value of flow.

18.2.5.2 Fully calculated installations

An installer's data sheet shall be displayed beside the pump, giving the following information:

a) the pump supplier's data sheets;

b) a schedule listing the technical data specified in 4.4.4.4;

c) a copy of the installer's pump characteristics sheet, similar in presentation to Figure 7;

d) the pressure loss, at flow *Qmax.*, between the pump outlet and the most hydraulically remote control valve set.

18.2.6 Electric switches and control panels

18.2.6.1 Alarms transmitted to the fire brigade

Where water flow into an installation initiates an automatic alarm to the fire brigade, a notice to that effect shall be fixed adjacent to the alarm test valve(s).

18.2.6.2 Diesel pumpset

The alarms specified in 10.8.6.1 and 10.9.11 at both the pump controller and the responsibly manned location shall be marked as appropriate:

a) diesel fire pump starter switched off;

b) diesel fire pump failure to start;

c) pump running;

d) diesel controller fault.

The manually operated shut-down mechanism (see 10.9.7.1) shall be labelled as follows:

'SPRINKLER PUMP SHUT-OFF'

18.2.6.3 Electric motor driven fire pump

Each switch on the dedicated power feed to an electric sprinkler fire pump motor shall be labelled as follows:

'SPRINKLER PUMP MOTOR SUPPLY -

NOT TO BE SWITCHED OFF IN THE EVENT OF FIRE'

18.2.7 Testing and operating devices

All valves and instruments used for testing and operation of the system shall be appropriately labelled. Corresponding identification shall appear in the documentation.

19 [A2] Commissioning [A2]

TB205
TB208.3.5
TB208.5.3
TB210.11
TB210.12

19.1 Commissioning tests

19.1.1 Pipework

19.1.1.1 Dry pipework

Dry pipework shall be tested pneumatically to a pressure of no less than 2,5 bar for no less than 24 h. Any leakage that results in a loss of pressure greater than 0,15 bar for the 24 h shall be corrected.

NOTE If climatic conditions do not allow the hydrostatic test specified in 19.1.1.2 to be carried out immediately after the pneumatic test, it should be carried out as soon as conditions permit.

19.1.1.2 All pipework

All installation pipework shall be hydrostatically tested for no less than 2 h, to a pressure of no less than 15 bar, or 1,5 times the maximum pressure to which the system will be subjected, (both measured at the installation control valves), whichever is the greater.

Any faults disclosed, such as permanent distortion, rupture or leakage, shall be corrected and the test repeated.

Care shall be taken not to subject any system components to pressure higher than those recommended by the supplier.

TB205
TB208.5.3
TB210.11
TB210.12

19.1.2 Equipment

The system shall be tested once as specified in 20.2.2 and 20.3.2 (i.e. making the tests, which will be made on a routine weekly and quarterly basis) and any faults shall be corrected.

TB205
TB208.5.3
TB210.11
TB210.12

19.1.3 Water supplies

Water supplies shall be tested once as specified in 8.6, and diesel engine driven pumps shall be tested as specified in 20.2.2.5.

TB205
TB208.5.3
TB210.11
TB210.12

19.2 Completion certificate and documents

The installer of the system shall provide the user with the following:

a) a completion certificate stating that the system complies with all appropriate requirements of this standard, or giving details of any deviation from the requirements;

b) a complete set of operating instructions and "as-built" drawings including identification of all valves and instruments used for testing and operation and a user's programme for inspection and checking (see 20.2).

TB205
TB208.5.3
TB210.11
TB210.12

TB226.8

20 Maintenance

20.1 General

20.1.1 Programmed work

The user shall carry out a programme of inspection and checks (see 20.2), arrange a test, service and maintenance schedule (see clause 20.3) and keep records including a logbook which shall be held on the premises.

The user shall arrange for the test, service and maintenance schedule to be carried out under contract by the system installer or a similarly qualified company.

After an inspection, check, test, service or maintenance procedure the system, and any automatic pumps, pressure tanks and gravity tanks shall be returned to the proper operational condition.

NOTE If appropriate, the user should notify interested parties of the intent to carry out tests and/or of the results.

20.1.2 Precautions while carrying out work

See annex J for precautions to be taken while the system is not operational or after a sprinkler operation.

20.1.3 Replacement sprinklers

TB203 A stock of spare sprinklers shall be kept on the premises as replacements for operated or damaged sprinklers. Spare sprinklers, together with sprinkler spanners as supplied by the supplier, shall be housed in a cabinet or cabinets located in a prominent and easily accessible position where the ambient temperature does not exceed 27°C.

The number of spare sprinklers per system shall be no less than:

a) 6 for LH installations;

b) 24 for OH installations;

c) 36 for HHP and HHS installations.

The stock shall be replenished promptly after spares are used.

Where installations contain high-temperature sprinklers, sidewall or other variations of sprinkler pattern or contain multiple controls, an adequate number of these spares shall also be maintained.

20.2 User's programme of inspection and checking

20.2.1 General

The installer shall provide the user with a documented inspection and checking procedure for the system. The programme shall include instruction on the action to be taken in respect of faults, operation of the system, with particular mention of the procedure for emergency manual starting of pumps, and details of the weekly routine of 20.2.2.

20.2.2 Weekly routine

20.2.2.1 General

Each part of the weekly routine shall be carried out at intervals of no more than 7 days.

20.2.2.2 Checks

The following shall be checked and recorded:

a) all water and air pressure gauge readings on installations, trunk mains and pressure tanks;

NOTE The pressure in the pipework in dry, alternate and pre-action installations should not fall at a rate of more than 1,0 bar per week.

b) all water levels in elevated private reservoirs, rivers, canals, lakes, water storage tanks (including pump priming water tanks and pressure tanks);

c) the correct position of all main stop valves.

20.2.2.3 Water motor alarm test

Each water motor alarm shall be sounded for no less than 30 s.

20.2.2.4 Automatic pump starting test

Tests on automatic pumps shall include the following;

a) fuel and engine lubricating oil levels in diesel engines shall be checked;

b) water pressure on the starting device shall be reduced, thus simulating the condition of automatic starting;

c) when the pump starts, the starting pressure shall be checked and recorded;

d) the oil pressure on diesel pumps shall be checked, as well as the flow of cooling water through open circuit cooling systems.

20.2.2.5 Diesel engine restarting test

Immediately after the pump start test of 20.2.2.4, diesel engines shall be tested as follows:

a) the engine shall be run for 20 min, or for the time recommended by the supplier. The engine shall then be stopped and immediately restarted using the manual start test button;

b) the water level in the primary circuit of closed circuit cooling systems shall be checked.

Oil pressure (where gauges are fitted), engine temperatures and coolant flow shall be monitored throughout the test. Oil hoses shall be checked and a general inspection made for leakage of fuel, coolant or exhaust fumes.

20.2.2.6 Trace heating and localized heating systems

Heating systems to prevent freezing in the sprinkler system shall be checked for correct function.

TB203

20.2.3 Monthly routine

The electrolyte level and density of all lead acid cells (including diesel engine starter batteries and those for control panel power supplies) shall be checked. If the density is low the battery charger shall be checked and, if this is working normally, the battery or batteries affected shall be replaced.

20.3 Service and maintenance schedule

20.3.1 General

20.3.1.1 Procedures

In addition to the schedule given in this clause any procedures recommended by component suppliers shall be carried out.

20.3.1.2 Records

A signed, dated report of the inspection shall be provided to the user and shall include advice of any rectification carried out or needed, and details of any external factors, e.g. weather conditions, which may have affected the results.

20.3.2 Quarterly routine

20.3.2.1 General

TB203

The following checks and inspections shall be made at intervals of no more than 13 weeks.

20.3.2.2 Review of hazard

The effect of any changes of structure, occupancy, storage configuration, heating, lighting or equipment etc. of a building on hazard classification or installation design shall be identified in order that the appropriate modifications may be carried out.

20.3.2.3 Sprinklers, multiple controls and sprayers

Sprinklers, multiple controls and sprayers affected by deposits (other than paint) shall be carefully cleaned. Painted or distorted sprinkler heads, multiple controls or sprayers shall be replaced.

Any petroleum jelly coatings shall be checked. Where necessary the existing coatings shall be removed and the sprinklers, multiple controls or sprayers shall be coated twice with petroleum jelly (in the case of glass bulb sprinklers to the sprinkler body and yoke only).

Particular attention shall be paid to sprinklers in spray booths, where more frequent cleaning and/or protective measures may be necessary.

20.3.2.4 Pipework and pipe supports

Pipework and hangers shall be checked for corrosion and painted as necessary.

Bitumen-based paint on pipework, including the threaded ends of galvanized pipework and hangers, shall be renewed as necessary.

NOTE Bitumen-based paint may need renewal at intervals varying from 1 to 5 years according to the severity of the conditions.

Tape wrapping on pipes shall be repaired as necessary.

The pipework shall be checked for electrical earthing connections. Sprinkler pipework shall not be used for earthing electrical equipment and any earthing connections from electrical equipment shall be removed and alternative arrangements made.

20.3.2.5 Water supplies and their alarms

Each water supply shall be tested with each control valve set in the system. The pump(s), if fitted, in the supply shall start automatically and the supply pressure at the appropriate flow rate shall be no less than the appropriate value in accordance with clause 10, recognizing any changes required by 20.3.2.2.

20.3.2.6 Electrical supplies

Any secondary electrical supplies from diesel generators shall be checked for satisfactory operation.

20.3.2.7 Stop valves

All stop valves controlling the flow of water to sprinklers shall be operated to ensure that they are in working order, and securely refastened in the correct mode. This shall include the stop valves on all water supplies, at the alarm valve(s) and all zone or other subsidiary stop valves.

20.3.2.8 Flow switches

Flow switches shall be checked for correct function.

20.3.2.9 Replacement

The number and condition of replacement parts held as spare shall be checked.

20.3.3 Half-yearly routine

20.3.3.1 General

The following checks and inspections shall be made at intervals of no more than 6 months.

20.3.3.2 Dry alarm valves

The moving parts of dry alarm valves, and any accelerators and exhausters, in dry pipe installations and subsidiary extensions shall be exercised in accordance with the supplier's instructions.

NOTE Alternate installations need not be tested in this way since they are exercised twice a year as a result of the changeover from wet to dry operation and back.

20.3.3.3 Fire brigade and remote central station alarm

The electrical installation shall be checked.

20.3.4 Yearly routine

20.3.4.1 General

The following checks and inspection shall be made at intervals of no more than 12 months.

20.3.4.2 Automatic pump flow test

Each water supply pump in the installation shall be tested at the full load condition (by means of the test line connection coupled to the pump delivery branch downstream of the pump outlet non-return valve) and shall give the pressure/flow values stated on the nameplate.

Appropriate allowances shall be made for pressure losses in the supply pipe and valves between the source and each control valve set.

20.3.4.3 Diesel engine failed-to-start test

The failed-to-start alarm shall be tested to be in accordance with 10.9.7.2.

Immediately after this test the engine shall be started using the manual starting system.

20.3.4.4 Float valves on water storage tanks

Float valves on water storage tanks shall be checked to ensure they function correctly.

TB203
TB213

20.3.4.5 Pump suction chambers and strainers

Pump suction strainers and settling chamber and their screens shall be inspected at least annually and cleaned as necessary.

20.3.5 3 Yearly routine

20.3.5.1 General

The following checks and inspections shall be made at intervals of no more than 3 years.

20.3.5.2 Storage and pressure tanks

All tanks shall be examined externally for corrosion. They shall be drained, cleaned as necessary and examined internally for corrosion.

All tanks shall be repainted and/or have the corrosion protection refurbished, as necessary.

20.3.5.3 Water supply stop valves, alarm and non-return valves

All water supply stop valves, alarm and non-return valves shall be examined and replaced or overhauled as necessary.

20.3.6 10 yearly routine

At no more than 10 year intervals, all storage tanks shall be cleaned and examined internally and the fabric attended to as necessary.

TB203

A1 *deleted text* A1

Annex A
(normative)

A2 Classification of typical hazards

Tables A1, A.2 and A.3 contain lists of minimum hazard classification. They shall also be used as guidance for occupancies not specifically mentioned. They shall be read in conjunction with 6.2.

TB221.1

Table A.1 — Light Hazard occupancies

Schools and other educational institutions (certain areas) ***see 6.2.1***
Offices (certain areas) ***see 6.2.1***
Prisons

Table A.2 — Ordinary Hazard occupancies

Occu-pancy	Ordinary Hazard group			
	OH1	OH2	OH3	OH4
Glass and ceramics			glass factories	
Chemicals	cement works	photographic film factories	dyers works soap factories ***photographic laboratories*** ***paint application shops with water based paint***	
Engineering	sheet metal product factories	***Metal working***	electronics factories radio equipment factories washing machine factories ***car workshops***	
Food and beverages		***Abattoirs, meat factories*** bakeries biscuit factories breweries chocolate factories confectionery ***dairies*** factories	animal fodder factories corn mills dehydrated vegetable and soup factories sugar factories	alcohol distilleries
Miscel-laneous	hospitals hotels libraries (excluding book stores) restaurants Schools ***see 6.2.1*** Offices ***see 6.2.1***	laboratories (physical) laundries car parks museums	broadcasting studios ***(small)*** railway stations **plant (technical)** room ***farm building***	cinemas and theatres concert halls tobacco factories ***Film and TV Production Studio***

Table A.2 — Ordinary Hazard occupancies *(continued)*

Occupancy	Ordinary Hazard group			
	OH1	OH2	OH3	OH4
Paper			book binding factories cardboard factories paper factories	waste paper processing
Shops and offices	data processing (computer room, excluding tape storage) offices ***see 6.2.1***		department stores shopping centre	exhibition halls ***(a)***
Textiles and clothing		leather goods factories	carpet factories (excluding rubber and foam plastics) cloth and clothing factories fibre board factories ***footwear factories (excluding plastics and rubber)*** knitting factories linen factories mattress factories (excluding foam plastics) sewing factories weaving mills woolen and worsted mills	cotton mills flax preparation plants hemp preparation plants
Timber and wood			woodworking factories furniture factories (without foam plastics) furniture showrooms upholstery (without foam plastics) factories	Saw mills plywood factories

NOTE Where there is painting or other similar high fire load areas in a OH1 or OH2 occupancy, they should be treated as OH3.

(a) Excessive clearance shall be taken into consideration.

Table A.3 — High Hazard Process occupancies

HHP1	HHP2	HHP3	HHP4
floor cloth and linoleum manufacture	Fire lighter manufacture	cellulose nitrate manufacture	firework manufacture
resin, lamp black and turpentine manufacture rubber substitute manufacture wood wool manufacture ***match manufacturers*** ***paint application shops with solvent*** ***refrigerator factories*** ***printing works*** ***cable factories for PP/PE/PS or similar burning characteristics other than OH3*** ***injection moulding (plastics) for PP/PE/PS or similar burning characteristics other than OH3*** ***plastics factories and plastic goods (excluding foam plastics) for PP/PE/PS or similar burning characteristics other than OH3*** ***rubber goods factories*** ***synthetic fibre factories (excluding acrylic)*** ***rope factories*** ***carpet factories including unexpanded plastics*** ***footwear factories including plastics and rubber***	tar distilling depots for buses, un-laden lorries and railway carriages ***candle wax and paraffin manufacturers*** ***paper machine halls*** ***carpet factories including rubber and foam plastics*** ***saw mill*** ***chipboard manufacturing (1)*** ***paint, colour and varnish manufacture***	***Rubber tires for cars and lorries*** ***manufacture of material factor M3 (see Table B.1) foam plastics, foam rubber and foam rubber goods manufacture (excluding M4 see Table B.1)***	
NOTE 1 Additional object protection can be necessary.			

A2

Annex B
(normative)

Methodology for categorizing stored goods

B.1 General

NOTE The overall fire hazard of stored goods (defined as a product and its packaging) is a function of its heat release rate (kW) which in turn is a function of its heat of combustion (kJ/kg) and its burning rate (kg/sec).

The heat of combustion is determined by the material or mix of materials in the goods. The burning rate is determined by both the materials involved and the configuration of the material.

The material shall be analysed to determine a material factor. Where necessary the material factor shall be modified according to the configuration of the goods to determine the category. If no modification is required, the material factor shall be the sole determinant of the category.

B.2 Material factor (M)

B.2.1 General

TB217 Figure B.1 shall be used to determine the material factor when goods consist of mixtures of materials. When using Figure B.1, the stored goods shall be considered to include all packaging and pallet material. For the purpose of this evaluation, rubber shall be treated in the same way as plastic.

The following four material factors shall be used in determining the category:

B.2.2 Material Factor 1

Non-combustible products in combustible packaging and low or medium combustibility products in combustible/non-combustible packaging. Products having little plastic content as defined below:

— unexpanded plastics content less than 5% by mass (including the pallet);

— expanded plastics content less than 5% by volume.

EXAMPLE

— metal parts with/without cardboard packaging on wood pallets;

— powdered foods in sacks;

— canned foods;

— non-synthetic cloth;

— leather goods;

— wood products;

— ceramics in cardboard/wood cases;

— metal tools in cardboard/wood packaging;

— cartonned plastic or glass bottles of non-flammable liquids;

— large electrical appliances (with little packaging).

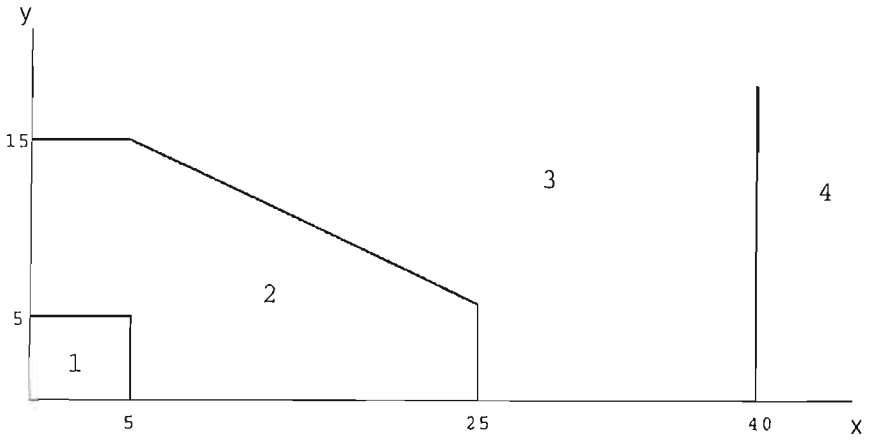

Key
1 Material factor 1
2 Material factor 2
3Material factor 3
4 Material factor 4
x % by volume of expanded plastic
y % by mass of unexpanded plastic

Figure B.1 — Material factor

B.2.3 Material factor 2

Goods having a higher energy content than Material factor 1 goods, for instance those containing plastics in greater quantities as defined in Figure B.1.

EXAMPLE

— wood or metal furniture with plastic seats;

— electrical equipment with plastic parts or packaging;

— electric cables on reels or in cartons;

— synthetic fabrics.

TB217

B.2.4 Material factor 3

Materials which are predominantly unexpanded plastic (see Figure B.1) or materials of a similar energy content.

EXAMPLE

— car batteries with no electrolyte;

— plastic brief cases;

— personal computers;

— unexpanded plastic cups and cutlery.

B.2.5 Material factor 4

Materials which are predominantly expanded plastic (more than 40% by volume) or materials of a similar energy content (see Figure B.1).

EXAMPLE

— foam mattresses;

TB217 — expanded polystyrene packaging;

— foam upholstery.

B.3 Storage configuration

B.3.1 Effect of storage configuration

After determining the material factor, the storage configuration shown in Column 1 of Table B.1 shall be referred to determine the most appropriate Categorization. If an appropriate category is also given in Table C.1 the higher of the two values shall be used.

Table B.1 — Categories as a function of storage configuration

Storage configuration	Material Factor			
	1	2	3	4
Exposed plastic container with non-combustible contents	Cat. I,II,III	Cat. I,II,III	Cat. I,II,III	Cat. IV
Exposed plastic surface - unexpanded	Cat. III	Cat. III	Cat. III	Cat. IV
Exposed plastic surface - expanded	Cat. IV	Cat. IV	Cat. IV	Cat. IV
Open structure	Cat. II	Cat. II	Cat. III	Cat. IV
Solid block materials	Cat. I	Cat. I	Cat. II	Cat. IV
Granular or powdered material	Cat. I	Cat. II	Cat. II	Cat. IV
No special configuration	Cat. I	Cat. II	Cat. III	Cat. IV
NOTE See B.3.2 to B.3.8 for explanations of the storage configurations.				

The storage configurations in the table are as follows:

B.3.2 Exposed plastic container with non-combustible content

This applies only to plastic containers containing non-combustible liquids or solids in direct contact with the container

NOTE This configuration does not apply to metal parts in plastic storage boxes.

Category I	: Containers with non-combustible liquids;
Category II	: Small (≤ 50 l) containers with non-combustible solids;
Category III	: Large (> 50 l) containers with non-combustible solids.

EXAMPLE

— plastic bottles of soft drinks or liquids with less than 20% alcohol,

— plastic tubs or drums of inert powder such as talcum.

NOTE The non-combustible contents act as a heat sink and reduce the rate of burning of the containers. Liquids are more effective than solids since they conduct heat more efficiently.

TB217

B.3.3 Exposed plastic surface - unexpanded

The category shall be increased to III or IV when the commodity has exposed plastic surfaces comprising one or more sides or more than 25% of the surface area.

EXAMPLE

— metal parts in PVC storage bins;

— shrink wrapped tinned foods.

For polypropylene and polyethylene storage bins, see G.8.

B.3.4 Exposed plastic surface - expanded

Exposed expanded plastics are more severe than unexposed plastics. They shall be treated as Category IV.

B.3.5 Open structure

Materials having very open structures generally present a higher hazard than materials with a closed structure. The high surface area together with high air access encourages rapid burning.

The increase in hazard can be very substantial particularly with ordinary combustibles.

EXAMPLE

— cardboard has a Material Factor of 1;

— in card flats it is Category I;

— in empty boxes assembled it is Category II (due to ready air access);

— in rolls stored vertically it is either Category III or greater (Special Risk) depending on the storage method (closely stacked, banded or unbanded etc.).

B.3.6 Solid block materials

Materials in solid block form have a low surface area to volume/mass ratio. This reduces the burning rate and permits a reduction in category.

EXAMPLE

TB217

— blocks of solid rubber, vinyl floor tiles in block storage.

NOTE This configuration does not apply to blocks of expanded plastics (Category IV).

B.3.7 Granular or Powdered materials

NOTE 1 Granular materials excluding expanded plastics that will spill out during a fire tend to smother the fire and are thus less hazardous than their basic material counterparts.

EXAMPLE

— plastic granules used for injection moulding stored in cardboard boxes.

NOTE 2 This configuration does not apply to rack storage.

B.3.8 No special configuration

Goods that have none of the above characteristics, e.g. cartonned goods.

Annex C
(normative)

Alphabetical listing of stored products and categories

Table C.1 shall be used to determine the category of stored products where any packaging, with or without pallets, is no more hazardous than a cardboard box or a single layer of corrugated cardboard wrapping.

A2

Table C.1 — Stored products and categories

Product	Category	Comments
Adhesives	III	With flammable solvents special protection required
Adhesives	I	Without solvent
Asphalt paper	II	In horizontal rolls
Asphalt paper	III	In vertical rolls
Batteries, dry cell	II	
Batteries, wet cell	II	Empty plastic accumulators require special protection
Beer	I	
Beer	II	Containers in wooden crates
Books	II	
Candles	III	
Canvas, tar-impregnated	III	
Carbon black	III	
Cardboard (all types)	II	Stored flat
Cardboard (except corrugated)	II	Rolls stored horizontally
Cardboard (except corrugated)	III	Rolls stored vertically
Cardboard (corrugated)	III	Rolls stored horizontally
Cardboard (corrugated)	IV	Rolls stored vertically
Cardboard cartons	III	Empty, heavyweight, made up boxes

TB217

TB217

Table C.1 — Stored products and categories (*continued*)

Cardboard cartons	II	Empty, lightweight, made up boxes
Carpet tiles	III	
Carpets, without plastic	II	Storing in racks requires in-rack sprinklers
Cartons, waxed, flats	II	
Cartons, waxed, made-up	III	
Cellulose	II	Baled, without nitrite and acetate
Cellulose pulp	II	
Ceramics	I	
Cereals	II	Boxed
Charcoal	II	Excluding impregnated charcoal
Cloth, synthetic	III	Stored flat
Cloth, wool or cotton	II	
Clothes	II	
Coconut matting	II	
Confectionery	II	
Cork	II	
Cotton, baled	II	Special measures, such as an increased area of operation, may be necessary
Crockery	I	
Electrical appliances	I	Predominantly metal construction with ≤ 5 % by mass of plastic
Electrical appliances	III	Others
Electrical cable or wire	III	Storage in racks requires in-rack sprinklers
Esparto	III	Loose or baled
Fertilizer, solid	II	May require special measures
Fibreboard	II	
Firelighters (barbecue)	III	

TB217

Table C.1 — Stored products and categories (*continued*)

Product	Category	Comments
Flax	II	Special measures, such as an increased area of operation, may be necessary
Flour	II	In sacks or paper bags
Foods, tinned	I	In cardboard boxes and trays
Foodstuffs	II	In sacks
Furniture, upholstered	II	With natural fibres and materials but excluding plastics
Furniture, wooden	II	
Furs	II	Flat in boxes
Glass fibre	I	Un-fabricated
Glassware	I	Empty
Grain	I	In sacks
Hemp	II	Special measures, such as an increased area of operation, may be necessary
Hides	II	
Jute	II	
Knitwear	II	See clothes
Laminated board	II	
Leather goods	II	
Linen	II	
Linoleum	III	
Matches	III	
Mattresses	IV	*With expanded plastic*
Mattresses	II	*Other than expanded plastics*
Meat	II	Chilled or frozen
Metal goods	I	

Table C.1 — Stored products and categories (*continued*)

Milk powder	II	In bags or sacks
Office material	III	
Paints	I	Water based
Paper	II	Sheets stored horizontally
Paper	III	Mass < 5 kg/100 m^2, (e.g. tissue paper), rolls stored horizontally
Paper	IV	Mass < 5 kg/100 m^2, (e.g. tissue paper), rolls stored vertically
Paper	III	Mass ≥ 5 kg/100 m^2, (e.g. newspaper), rolls stored vertically
Paper	II	Mass ≥ 5 kg/100 m^2, (e.g. newspaper), rolls stored horizontally
Paper, bitumen coated	III	
Paper, pulp	II	Rolled or baled
Paper, waste	III	Special measures may be necessary, such as an increased area of operation.
Pillows	II	Feather or down
Rags	II	Loose or baled
Resins	III	Excluding flammable liquids
Roof felt in rolls	II	Horizontal storage
Roof felt in rolls	III	Vertical storage
Rope synthetic	II	
Shoes	II	≤ 5 % by mass of plastic
Shoes	III	With plastic > 5 % by mass
Soap, water soluble	II	
Alcohol	I	≤ 20 % degree proof of alcohol
Alcohol	III	> 20 % degree proof of alcohol only in bottle others see Annex G

TB217

TB217

Table C.1 — Stored products and categories (*concluded*)

Product	Category	Comments
String / rope natural fibres	***II***	
Sugar	II	In bags or sacks
Textiles		See cloth
Timber, sawn	III	In ventilated stacks
Timber, sawn	II	Not in ventilated stacks
Timber, un-sawn	II	
Tobacco	II	Leaf and finished goods
Tyres stored horizontally	IV	Tyres stored vertically, in racks, are not covered by this European Standard
Vegetable fibres	II	Special measures such as an increased area of operation may be necessary
Wax (paraffin)	IV	
Wicker work	III	
Wood		See timber
Wood, chipboard, plywood	II	Stored flat, excluding ventilated stacks
Wood pulp	II	Baled
Wood veneer sheets	III	
Wood wool	IV	Baled

A2

Annex D
(normative)

Zoning of sprinkler installations

D.1 General

This annex specifies requirements particular to the sprinkler protection of buildings when zoning is adopted. It applies only to OH sprinkler installations of the wet pipe type.

NOTE Zoning is optional except where required elsewhere in this standard (see annex E and annex F).

D.2 Zoning of installations

Wet pipe Ordinary Hazard sprinkler installations may be zoned or unzoned.

[A2] The protected floor area to be controlled by any one wet control valve set in Ordinary Hazard may exceed that shown in Table 17, with the following restrictions: [A2]

[A2]

a) the protected floor area to be controlled by any one wet control valve set on any one floor shall not exceed 12 000 m^2; [A2]

b) the installation shall be zoned in accordance with D.3;

c) zoned installations shall not include any hazard greater than OH3;

d) car parks and areas involving the unloading and storage of goods shall be on a separate unzoned installation;

e) the building shall be sprinkler protected throughout on all floors;

[A2]

f) the protected floor area to be controlled by any one control valve set shall not exceed 120 000 m^2. [A2]

D.3 Requirements for zoned installations

D.3.1 Extent of zones

[A2] The protected floor area per zone shall be no greater than 6 000 m^2. [A2]

D.3.2 Zone subsidiary stop valves

Each zone shall be independently controlled by a single zone subsidiary stop valve, installed in a readily accessible position at the floor level of the zone it controls. Each valve shall be secured open and be labelled to identify the area of protection it controls.

D.3.3 Flushing Valves

Each zone shall be fitted with a valve no less than 20 mm nominal diameter, either on the end of the distribution pipe hydraulically most remote from the water supply, or on the end of each distribution pipe spur, as appropriate. The valve outlet shall be fitted with a brass plug cap.

D.3.4 Monitoring

Zoned sprinkler installations shall be provided with tamper-proof devices to monitor the status of:

a) each stop valve (i.e. either fully open or not fully open), including subsidiary stop valves, capable of interrupting the flow of water to sprinklers;

b) water flow into each zone immediately downstream of each zone subsidiary stop valve, to indicate the operation of each zone, by means of a water flow alarm switch capable of detecting a flow equal to or greater than that from any single sprinkler;

c) water flow through each main installation control valve set.

D.3.5 Zone test and drainage facilities

Permanent test and drainage facilities shall be provided immediately downstream of the water flow alarm switch on each zone. The test facility shall simulate operation of any single sprinkler head. Adequate provision shall be made for the disposal of waste water.

D.3.6 Installation control valve set

The control valve set of a zoned sprinkler installation shall have two stop valves, one on each side of a single alarm valve with a bypass connection of the same nominal bore around all three valves, fitted with a normally closed stop valve (see Figure D.1). Each of the three stop valves shall be fitted with tamper proof devices to monitor their status.

D.3.7 Installation monitoring and alarms

The monitoring devices required by D.3.4 and D.3.6 shall be electrically connected to a control and indicating panel, installed at an accessible location on the premises, where the following indications and warnings shall be given:

a) green visual indicators to indicate that each monitored stop valve is in its correct operational position;

b) audible devices and amber visual indicators to indicate that one or more control valve sets are not fully open;

c) audible devices and amber visual indicators to indicate that one or more zone subsidiary stop valves are not fully open;

d) audible devices and amber visual indicators to indicate that the static pressure in any trunk main supplying the system has fallen to a value 0,5 bar or more below the normal static pressure;

e) audible devices and red visual indicators to indicate that water is flowing into the installation;

f) audible devices and red visual indicators to indicate that water is flowing into one or more zones.

Facilities shall be provided at the indicator panel for silencing the audible alarms but the visual indicators shall continue to operate until the installation is restored to the normal standby condition.

Fire and fault signals shall be indicated at a permanently manned location (see annex I).

Any change in the panel alarm or fault indication after the audible alarm has been silenced shall cause it to resume sounding until it is again silenced or the panel reset to the normal standby condition.

D.4 Block plan

Where installations are arranged in zones, the site block plan shall additionally indicate the positions of the zone control valves.

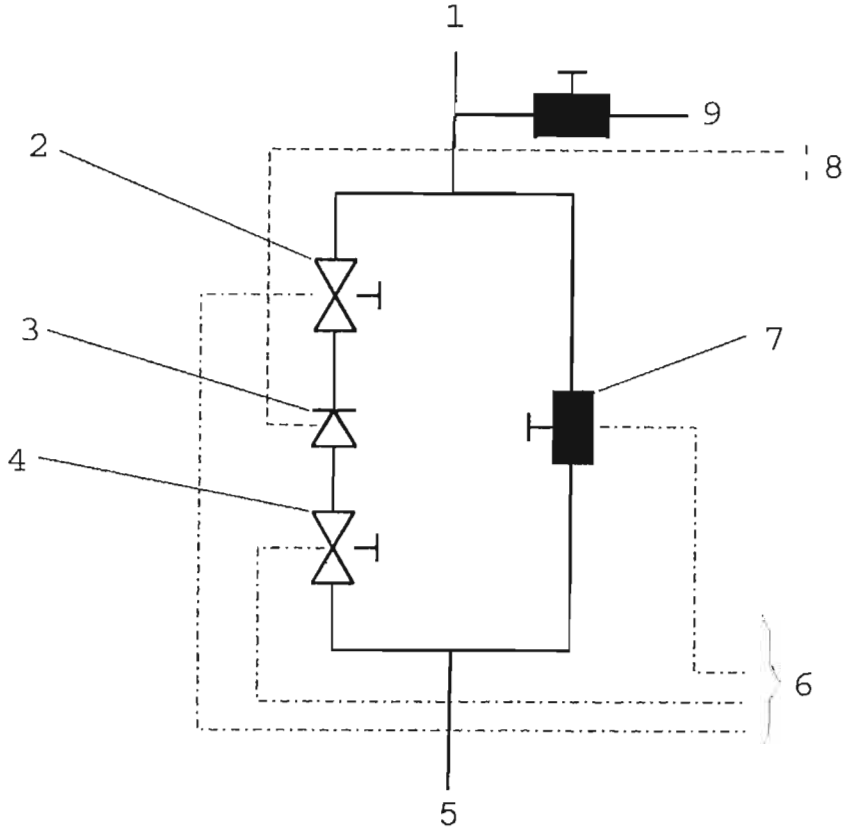

Key

1 To installation
2 Downstream stop valves plastic
3 Alarm valves
4 Upstream stop valves
5 From water supply
6 Installation monitoring facility
7 Bypass stop valve
8 Alarm devices
9 Test connection

Figure D.1 — Control valve bypass arrangement for zoned building installations

Annex E
(normative)

Special requirements for high rise systems

E.1 General

The requirements of this annex shall be applied to the sprinkler protection of multi-storey buildings with a height difference between the highest and lowest sprinkler exceeding 45 m.

The requirements are applicable to buildings intended for use with occupancies where the hazard is classified as no greater than OH3. Special fire engineering solutions are needed for high rise systems with hazards greater than OH3, and specialist advice should be sought.

E.2 Design criteria

E.2.1 Hazard group

High rise sprinkler systems shall comply with the requirements for Ordinary Hazard Group III protection.

E.2.2 Subdivision of high rise sprinkler systems

High rise sprinkler systems shall be sub-divided into sprinkler installations such that the height difference between the highest and lowest sprinkler on any one installation does not exceed 45 m (see Figures E.1 and E.2).

E.2.3 Standing water pressures at non-return and alarm valves

The minimum standing pressure at any non-return or alarm valve inlet shall be no less than 1,25 times the static head difference between the valve and the highest sprinkler on the installation.

Non-return valves controlling installation flow shall operate correctly with a ratio of service pressure to installation pressure not exceeding 1,16:1, as measured by valve lift and pressure equalization upstream of the non-return valve.

E.2.4 Calculation of distribution pipework for pre-calculated systems

The main distribution pipes, including risers and drops, between the highest design point in an installation and the zone subsidiary stop valve at the same floor level shall be sized by hydraulic calculations. The maximum friction loss shall not exceed 0,5 bar at a flow of 1000 l/min (see 13.3.4.2).

Where sprinkler protection is at various floor levels in an installation, the allowable pressure loss between the design points and zone subsidiary stop valves on lower levels may be increased by an amount equal to the difference in static head gain between the sprinklers at the level concerned and the highest sprinkler in the installation.

E.2.5 Water pressures

Pipework, fittings, valves and other equipment shall be capable of withstanding the maximum pressure likely to be encountered.

To overcome the problem of pressures in excess of 12 bar, hydraulic alarm gongs may be driven via a pressure reducing valve or from a secondary water supply such as a town main, controlled by a diaphragm valve connected to the main installation control valve alarm port.

E.3 Water supplies

E.3.1 Types of water supplies

The system shall have at least one superior single water supply.

E.3.2 Pressure and flow requirements for pre-calculated installations.

The water supply shall be designed to achieve a minimum pressure and flow condition at the zone subsidiary stop valve outlet as specified in Table 6, taking P_s to be the pressure difference equivalent to the height of the highest sprinkler above the installation zone subsidiary stop valve.

E.3.3 Water supply characteristics for pre-calculated installations.

The water supply characteristics shall be determined by a hydraulic calculation of the pipework upstream of the zone subsidiary stop valve outlet, at the higher and lower flow rates specified in Table 6, and shall include calculations at the water supply datum point.

E.3.4 Pump performance for pre-calculated installations.

Automatic pumps shall have characteristics in accordance with Table 16.

NOTE Pressures are taken at the pump outlet or the relevant stage of multi-stage pumps, on the delivery side of any orifice plate.

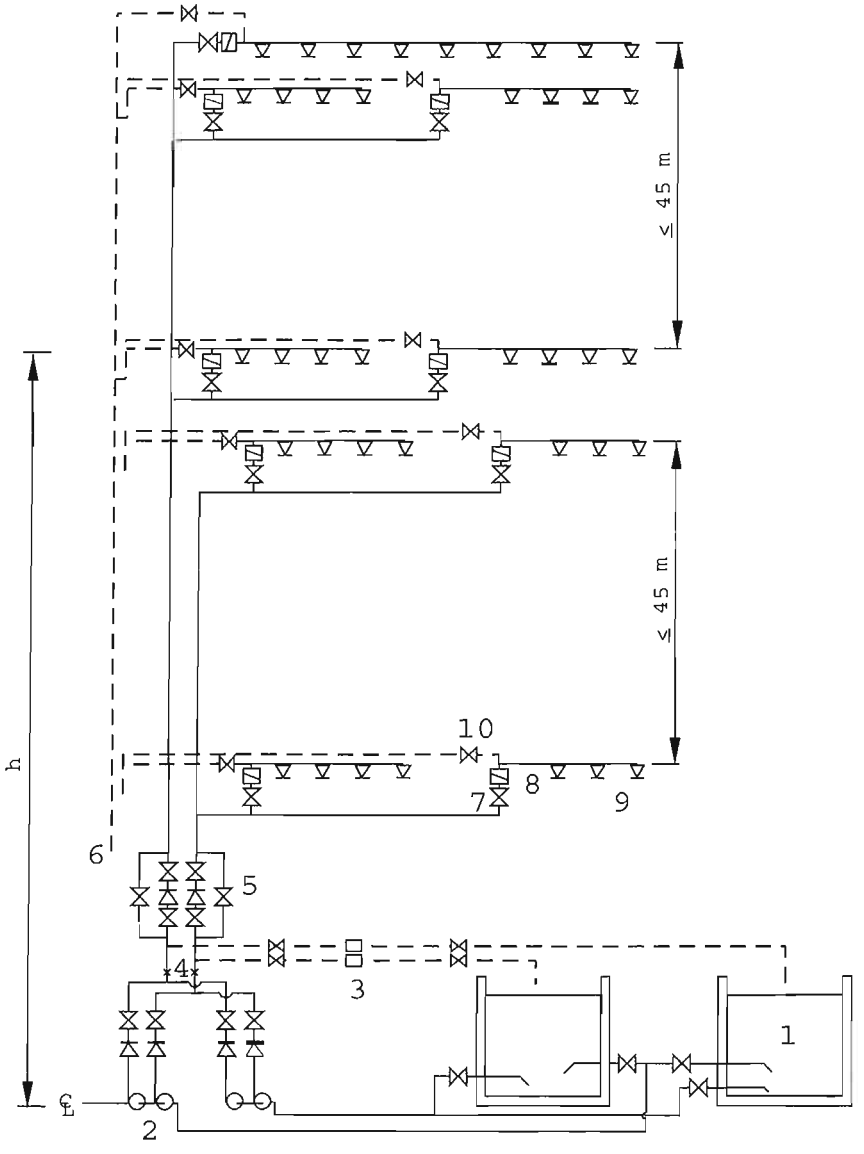

Key

1 Storage tank
2 Multistage pump
3 Flow meter
4 Water supply datum point
5 Alarm valve station (with bypass arrangement)
6 Flow test and zone drainage
7 Zone subsidiary stop valve
8 Water flow alarm switch
9 Sprinkler head
10 Water flow alarm switch rest valve and zone drain valve

Figure E.1 — Typical layout of high rise system with pump supply

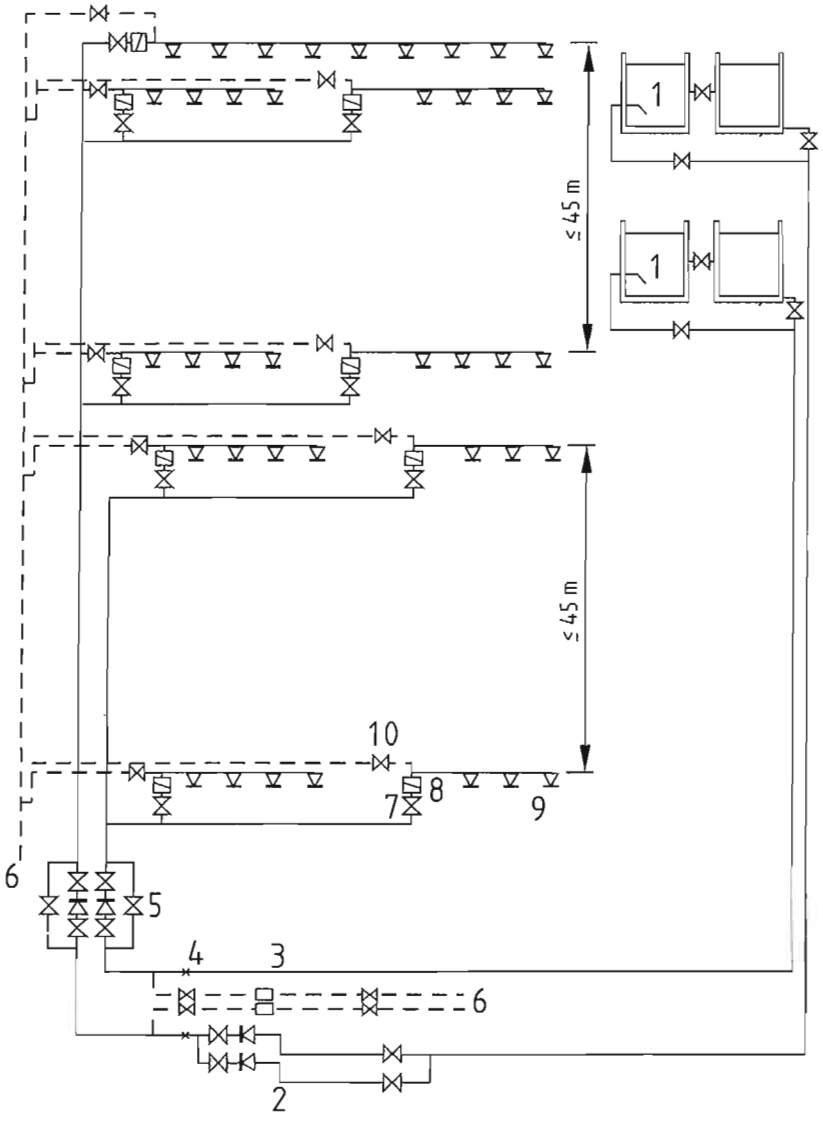

Key

1 Storage tank
2 Multistage pump
3 Flow meter
4 Water supply datum point
5 Alarm valve station (with bypass arrangement)
6 Flow test and zone drainage
7 Zone subsidiary stop valve
8 Water flow alarm switch
9 Sprinkler head
10 Water flow alarm switch rest valve and zone drain valve

Figure E.2 — Typical layout of high rise system with gravity tanks and booster pumps

Annex F
(normative)

Special requirements for life safety systems

F.1 Subdivision into zones

[A2] Installations shall be subdivided into zones, in accordance with Annex D, with a maximum of 2 400 m^2 protected floor area. [A2]

F.2 [A2] Wet pipe installations [A2]

Sprinkler installations for life safety shall be of the wet pipe type and any subsidiary dry pipe or alternate extension shall comply with 11.5.

F.3 Sprinkler type and sensitivity

Quick response sprinklers shall be used, except that standard 'A' and special response may be used in rooms no less than 500 m^2 in area or no less than 5 m in height.

F.4 Control Valve valve set

During servicing and maintenance of the installation alarm valves, the sprinkler installation shall be fully operational in all aspects.

NOTE In some countries duplicate installation control valve sets are required.

F.5 Water supplies

The system shall have at least one superior single water supply.

NOTE In some countries duplicate supplies are required for life safety systems.

F.6 Theatres

In theatres with separated stages (i.e. where there is a safety curtain between the stage and auditorium) the safety curtain shall be provided with a line of drenchers controlled by a quick opening valve (e.g. a plug valve) fitted in an accessible position. The water supply for the drenchers shall be taken upstream of any control valve set. The stage shall be protected by a water spray installation with automatic and manual activation. Alternatively, stages with a total height no greater than 12 m may be protected by sprinklers.

All workshops, dressing rooms, scenery, storerooms and spaces below the stage shall be sprinklered.

F.7 Additional precautions for maintenance

Only one zone of a multi-zone installation shall be shut down at a time. An installation or zone shall be shut down for the minimum time necessary for maintenance.

The partial or complete shut-down of a life safety sprinkler installation shall be avoided wherever possible. Only the smallest part of the installation necessary shall be isolated.

When a zone (or zones) is charged or recharged with water after draining, the flushing valve(s) (see D.3.3) shall be used to check that water is available in the zone (or zones).

Individual alarm valves in a duplicate control valve set, where required, shall be separately serviced, provided the water supply to the installation is maintained.

The following procedure shall be followed before servicing duplicate control valve sets:

— the stop valves to the duplicate alarm valve shall be opened. The stop valves to the alarm valve to be serviced shall be closed and an alarm test (see 20.2.2.3) carried out immediately on the other alarm valve;

— if water is not available, the stop valve shall be opened immediately, and the fault rectified before proceeding.

Annex G
(normative)

Protection of ⟦A2⟩ *deleted text* ⟨A2⟧ special hazards

G.1 General

The additional requirements of this annex shall be used for the protection of the products specified.

G.2 Aerosols

The following design of protection (see Table G.1) shall be used when aerosol products are segregated from other types of product and are contained in cages.

NOTE Sprinkler protection may not be effective where such products are not contained in cages.

Table G.1 — Protection criteria for aerosol storage

	Maximum storage or tier height m		Ceiling sprinkler temperature °C	Density mm/min	Area of operation m^2
	alcohol based	hydrocarbon based			
ST1 Free standing and block storage	1,5	-	141	12,5	260
	-	1,5	141	25,0	300
ST4 Palletized rack	tiers ≤ 1,8	-	141	12,5 plus in-rack sprinklers	260
	-	tiers ≤ 1,8	141	25,0 plus in-rack sprinklers	300

In rack sprinklers shall be quick response type with a temperature in accordance with 14.4.

TB216

G.3 Clothes in multiple garment hanging storage

G.3.1 General

This annex contains special requirements for the protection of intensive hanging garment stores having multiple rows or garment racks at two or more levels. They may have automatic or semi-automatic garment delivery, picking or transportation systems. Access to elevated garment storage levels within the warehouse is usually by walkways and ramps. A common feature of hanging garment storage is that there is no fire separation between the decks. Walkways, aisles, ramps and garment racks create a significant obstruction to ceiling level sprinkler protection. A2 Protection of hanging garments stored in carousels or vertical blocks without aisles, and of other configurations than described below is beyond the scope of this annex. A2

G.3.2 Categorization

The requirements of this annex shall be applied to all types of garments, irrespective of their storage category.

G.3.3 Sprinkler protection other than at ceiling

Sprinkler protection shall be in accordance with the requirements for in-rack sprinklers.

Each garment rack shall be limited to two rows of hanging garments (side by side) and a storage height of 3,5 m between intermediate levels of sprinklers. Each rack shall be separated by an aisle of at least 0,8 m width. The garment racks shall be protected by a single row of sprinklers. The spacing between the sprinkler rows shall not exceed 3,0 m.

The sprinklers installed directly above the garment racks shall be stagger spaced in the vertical plane, at horizontal intervals of not more than 2,8 m along the length of the rack. There shall be a sprinkler not more than 1,4 m from the rack end. The clearance between the top of the garments and the sprinkler deflector shall be at least 0,15 m (see Figure G.1).

Except as modified below, each sprinkler row protecting garment storage racks shall be capped by a continuous solid horizontal baffle of at least the length and width of the garment row. The baffle shall be of a Euroclass A1 or A2 or an equivalent in existing national classification systems material.

The upper level of sprinkler rack protection and baffle may be omitted providing the clearance between the top of the garments and the deflectors of the ceiling sprinklers does not exceed 3 m height.

Sprinklers shall be installed below all access ramps, main aisles, walkways and transportation routes, with the exception of aisles, not exceeding 1,2 m wide, between sprinkler protected garment storage rows.

G.3.4 Sprinklers in operation

The number of rack sprinklers assumed to be in operation shall be as follows:

Rows:	3
Levels:	≤ 3
Sprinklers per row:	3

Where there are more than 3 levels of sprinkler protection, 3 rows of 3 sprinklers on 3 protected levels shall be assumed to operate. Where there are 3 levels or less, 3 rows of 3 sprinklers shall be assumed to operate on all protected levels.

G.3.5 Ceiling sprinklers

Ceiling sprinklers shall be designed to provide a density of 7,5 mm/min over an area of operation of 260 m^2, providing the uppermost level of racks is capped and protected by rack sprinklers.

If the uppermost level or the capping is omitted, the ceiling sprinklers shall be designed on the basis of at least Category III goods. The stack height shall be measured from above the uppermost intermediate level sprinklers to the top of the hanging garments.

G.3.6 Automatic shutdown

Operation of the sprinkler system shall automatically stop all automated distribution systems within the warehouse.

G.3.7 Control valve set

All installations shall be of the wet pipe type.

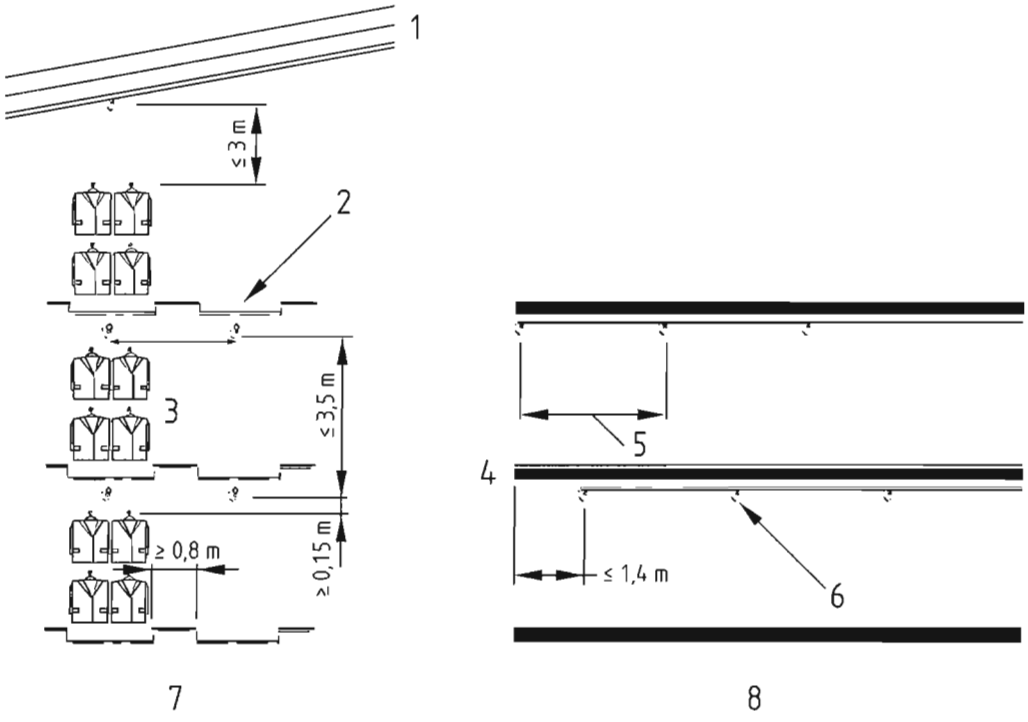

Key
1 Ceiling
2 Baffle
3 Aisle
4 Rack end
5 Max sprinkler pitch
6 Sprinkler head
7 End view
8 Aisle view

Figure G.1 — Typical sprinkler protection of garment racks

G.4 Flammable liquid storage

Flammable liquids shall be classified into four classes according to their flash point (FP) and boiling point (BP), as shown in Tables G.2, G.3 and G.4.

Table G.2 — Flammable liquids in metal drums (ST1) with a capacity > 20 l and ≤ 208 l

Class	Properties °C	Drum orientation	Permitted storage	Ceiling sprinklers	
				Density mm/min	Area of operation m^2
1	FP ≥ 100	on side on end	≤ 12 drums high ≤ 6 drums high	10	450
2	FP < 100	on side on end	≤ 6 drums high ≤ 2 drums high	25	450
3	FP < 35	on side on end	≤ 3 drums high ≤ 1 drum high	25	450
4	FP < 21 and BP < 35	on side or on end	1 drum high	25	450

TB214

Table G.3 — Flammable liquids in metal drums (ST4) with a capacity > 20 l and ≤ 208 l

Class	Properties °C	Drum orientation	Intermediate sprinkler levels	Ceiling sprinklers	
				Density mm/min	Area of operation m^2
1	FP ≥ 100	on side on end	each 12th tier each 6th tier	10 10	450
2	FP < 100	on side on end	each 6th tier each tier.	25 10	450
3	FP < 35	on side on end	each 3rd tier each tier	25 10	450
4	FP < 21 and BP < 35	on side or on end	each tier	25	450
NOTE This table applies to drums stored at a height of one drum per tier.					

TB214

Table G.4 — Flammable liquids in metal drums (ST1, ST5, ST6) with a capacity ≤ 20 l

Class	Properties °C	Type of storage	Maximum permitted storage height m	Ceiling sprinklers	
				Density mm/min	Area of operation m^2
1	FP ≥ 100	ST1 ST5/6	5,5 4,6	10 7,5	450
2	FP < 100	ST1 ST5/6	4,0 4,6	12,5	450
3	FP < 35				
4	FP < 21 and BP < 35	ST1 ST5/6	1,5 2,1	12,5	450

G.5 Idle pallets

Idle pallets stored in solid piles or on pallets shall be protected with ceiling sprinklers in accordance with Table G.5. Pallets stored in racks shall be protected with ceiling and in-rack sprinklers in accordance with Table G.6.

TB215

Table G.5 - Protection of idle pallets (ST1)

A2

Type of pallet	Maximum permitted storage height m	Ceiling sprinklers (see Table 4)	Special requirements
Wood and cellulose material pallets.	3,8	As for Category IV	
Plastic pallets.	3,3	25 mm/min over 300 m^2	Storage in 60 min fire resistant compartment.

A2

TB215

Table G.6 — Protection of rack storage of pallets (ST4, ST5, ST6)

Type of pallet	In-rack sprinklers	Ceiling sprinklers (see Table 4)	Special requirements
Wood and cellulose material pallets. Non-expanded high density polyethylene pallets with solid deck	Category IV	As per Category IV. Sprinklers rated at 93 °C or 100°C	60 min fire resistant compartment when storage height > 3,8 m
All other plastic pallets.	Category IV, including one level of sprinklers above top level of storage, sprinklers with K=115 and minimum operating pressure of 3 bar	25 mm/min over 300 m^2	Storage in 60 min fire resistant compartment.

G.6 Spirit based liquors in wooden barrels

Barrels may be stored to a height not exceeding 4,6 m with ceiling sprinklers only. For greater storage heights intermediate sprinklers shall be installed in accordance with Category III/IV requirements. In both cases the ceiling sprinklers shall be installed to give a density of spray of 15 mm/min over an area of operation of 360 m^2.

NOTE 1 Drainage or bunding should be provided to limit the spread of liquid spills.

NOTE 2 For the purposes of this standard, spirituous liquor is defined as that containing more than 20% alcohol.

G.7 Non-woven synthetic fabric

G.7.1 Free standing storage

Ceiling sprinklers shall be installed using the criteria shown in Table G.7.

A2 NOTE For storage heights above 4,1 m consideration may be given to the use of special technology sprinklers (see Annex L). A2

Table G.7 — Non-woven synthetic fabric: design criteria with roof or ceiling protection only

Storage Configuration	Maximum permitted storage height (see note 1) m	Minimum design density mm/min	Area of operation (wet or pre-action system) (see note 2) m²
ST1 Free standing or block stacking	1,6 2,0 2,3 2,7	10,0 12,5 15,0 17,5	260
	3,0 3,3 3,6 3,8 4,1	20,0 22,5 25,0 27,5 30,0	300

NOTE 1 The vertical distance from the floor to the sprinkler deflectors, minus 1 m, or the highest value shown in the table, whichever is the lower.
NOTE 2 Dry and alternate installations should be avoided.

G.7.2 Rack storage

In-rack sprinklers shall be used in accordance with Category IV requirements. Ceiling sprinklers shall have a minimum design density of 12,5 mm/min over 260 m^2.

G.8 Polypropylene or polyethylene storage bins

G.8.1 General

The following requirements shall be met unless other types of sprinkler protection are shown to be valid by appropriate fire testing.

G.8.2 Classification

Polypropylene and polyethylene storage containers shall be classified as HHS Category IV.

G.8.3 Palletized rack storage (ST4)

In-rack sprinklers shall have a horizontal spacing not exceeding 1,5 m. The vertical distance between in-rack sprinklers shall not exceed 2 m. The ceiling sprinklers shall have a sensitivity rating of "Special" and in-rack sprinklers shall have a sensitivity of "Special" or "Quick".

G.8.4 All other storage

The maximum storage height shall not exceed 3 m. Only non-inflammable pallets, for example steel pallets, shall be used. The stack height per pallet shall not exceed 1 m and the uppermost storage container on each pallet shall be closed with a lid. The sprinklers shall have a sensitivity rating of "Special" or "Quick".

G.8.5 Foam additive

A suitable film forming foam, used in accordance with the supplier's recommendation, shall be added to the sprinkler water.

NOTE In full scale fire tests, AFFF (aqueous film forming foam) has been shown to be effective.

Annex H
(normative)

Sprinkler systems monitoring

H.1 General

The aim of monitoring sprinkler systems is the continuous supervision of the main functions of the system, i.e. those whose failure might impair the correct automatic operation of the system in case of fire, and the raising of a supervisory alarm to allow corrective measures to be taken. This annex specifies requirements, which are additional to those elsewhere in the standard. They shall be complied with whenever monitoring is specified.

All devices used for monitoring shall have at least IP 54 protection as specified in EN 60529. No more than 15 non-addressable supervisory alarm devices shall be connected to a common indication.

All signalling and alarm circuits shall be fully supervised and a fault alarm shall be given in the event of short or open circuit where this corresponds to a fault.

Control and indicating equipment shall be in accordance with any provision valid in the country in use.

H.2 Functions to be monitored

H.2.1 General

The following shall be monitored in addition to all monitoring requirements specified elsewhere in this standard (see annex I):

H.2.2 Stop valves controlling water flow to sprinklers

The position of all normally open stop valves the closing of which could prevent water flowing to the sprinklers, including water supply valves, control valve sets, subsidiary valves and sectional valves. An indication shall be given whenever the valve is less than fully open.

H.2.3 Other stop valves

The position of all normally open stop valves the closing of which could prevent the correct operation of an alarm or indicating device, e.g. pressure switch, hydraulic alarm, flow switch. An indication shall be given whenever the valve is less than fully open.

H.2.4 Liquid levels

All critical liquid levels, including water storage tanks and engine fuel tanks. An indication shall be given before a water storage level drops more than 10% below its nominal fill level, or before a fuel level drops more than 25% below its nominal fill level. In the case of pressure tanks a further indication shall be given before the level reaches 10% above its nominal fill level.

H.2.5 Pressures

Pressures, including at water supplies and downstream of all dry and alternate control valve sets. On town main supplies an indication shall be given if the static pressure drops below the calculated running pressure. In all other cases an indication shall be given when the static pressure drops by more than 20% below the tested level.

H.2.6 Electrical power

The power supply to electrical pump sets or other critical electrical equipment. An indication shall be given if one or more phases fail at any point in the main supply, or in the control circuit or an electric or diesel pump controller or any other critical control equipment.

H.2.7 Temperature

Minimum temperature of the sprinkler valve and pump room. An indication shall be given if the temperature drops below the minimum required level.

Annex I
(normative)

Transmission of alarms

I.1 Functions to be monitored

Alarms, as specified in this standard, shall be connected to an alarm panel in the sprinkler control room or pump room and be transmitted onwards depending on the importance of the alarm. Alarms shall be transmitted to a permanently attended location, on or off the premises, or to a responsible person in such a way that appropriate action can be taken immediately.

I.2 Alarm levels

Signals such as water flow indication, which could be indicative of a fire, shall be shown as fire alarms (Alarm level A in Table I.1). Technical faults such as a power failure, which could prevent the system operating correctly in case of fire, shall be shown as trouble alarms (Alarm level B in Table I.1).

Table I.1 — Type of alarm for transmission

Alarm	Clause	Alarm type
Low pressure in town main	9.2.1	B
Water flow detector in pump room	10.3.2	A
Electric pump set	10.8.6.1	
- on demand		B
- start failure		B
- running		A
- power not available		B
Diesel pump set	10.9.11	
- automatic mode off		B
- start failure		B
- running		A
- fault in controller		B
Trace heating circuits	11.1.2.2	B
Low pressure		
- pre-action Type A system	11.4.1.1	B
- dry pipe and pre-action systems	16.2.3	B
Zoned systems	D.3.7	
- open control valve		B
- partially closed control valve		B
- partially open subsidiary valve		B
- low mains pressure		B
- water flow in installation		A
- water flow in zone		A
Monitored sprinkler systems	Annex H	
- partially closed stop valves		B
- liquid levels		B
- low pressure		B
- power failure		B
- low temperature in pump room		B

Annex J
(informative)

Precautions and procedures when a system is not fully operational

J.1 Minimizing the effects

Maintenance, alterations and repair of systems which are not fully operational should be carried out such as to minimize the time and extent of non-operation.

When an installation is rendered inoperative the user should implement the following measures:

a) the authorities and any central monitoring station should be informed;

b) alterations and repairs to an installation or its water supply (except possibly a life safety installation (see annex F)) should be carried out during normal working hours;

c) supervisory staff in the areas affected should be notified and the area should be patrolled continuously;

d) any hot work should be subject to a permit system. Smoking and naked lights should be prohibited in affected areas during the progress of the work;

e) when an installation remains inoperative outside working hours all fire doors and fire shutters should remain closed;

TB203.0.1.2
TB203.6

f) fire extinguishing appliances should be kept in readiness, with trained personnel available to handle them;

g) as much as possible of the installation should be retained in an operative condition by blanking off pipework feeding the part or parts where work is taking place;

h) in the case of manufacturing premises, when the alterations or repairs are extensive, or it is necessary to disconnect a pipe exceeding 40 mm nominal diameter, or to overhaul or remove a main stop valve, alarm valve or non-return valve, every effort should be made to carry out the work while the machinery is stopped;

i) any pump which is out of commission should be isolated by means of the valves provided;

j) where possible parts of installations should be reinstated to provide some protection overnight by using blinders and blanks within the pipework; the blinders and blanks should be fitted with visible indicator tags numbered and logged to aid timely removal.

J.2 Planned shut-down

Only the user should give permission for a sprinkler installation or zone to be shut down for any reason other than an emergency.

Before a system is wholly or partly shut down every part of the premises should be checked to ensure that there is no indication of fire.

Where premises are subdivided into separate occupancies constituting buildings in communication or at risk, protected by common sprinkler systems or installations, all occupiers should also be advised that the water is to be turned off.

Particular attention should be given to situations where installation pipework passes through walls or ceilings where these may feed sprinklers in areas needing special consideration.

J.3 Unplanned shut-down

When an installation is rendered inoperative as a matter of urgency or by accident, the precautions in J.1 should be observed as far as they are applicable with the least possible delay. The authorities concerned should also be notified as soon as is possible.

J.4 Action following sprinkler operation

TB203.7

J.4.1 General

Following shut-down after operation of an installation, the operated sprinkler heads should be replaced by heads of the correct type and temperature rating, and the water supply restored. Unopened sprinklers around the area in which operation took place should be checked for damage by heat or other cause and replaced as necessary.

The water to an installation or zone of an installation that has operated should not be shut off until all fire has been extinguished.

The decision to shut down an installation or zone which has operated because of a fire should be taken only by the fire service.

Components removed from the system should be retained by the user for possible examination by an authority.

J.4.2 Installations protecting cold storage warehouses (air circulation refrigeration)

TB203.7

The installation should be dismantled for drying out after each operation.

Annex K
(informative)

Twenty-five year inspection

After 25 years the pipes and the sprinklers should be inspected.

The pipework should be thoroughly flushed out and hydrostatically tested to a pressure equal to the maximum static pressure or 12 bar, whichever is the higher.

The pipework should be internally and externally inspected. At least one metre length of range pipe should be inspected per 100 sprinklers. Two pipe sections of at least one metre length of each pipe diameter should be inspected.

All defects which might adversely affect the performance of the system should be eliminated.

In the case of wet pipe systems at least one sprinkler installation per building should be checked. If several wet control valve sets are installed in one building only 10% need be inspected. In the case of dry pipe systems, such a reduction of the number of installations to be checked is not allowed.

A number of sprinklers should be removed and inspected. Table K.1 specifies the scope of sampling as a function of the total number of sprinklers installed.

Table K.1 — Number of sprinklers to be inspected

Total number of sprinklers installed	Number of sprinklers to be inspected
≤ 5 000	20
≤ 10 000	40
≤ 20 000	60
≤ 30 000	80
≤ 40 000	100

The sprinklers should be evaluated for the following:

a) Operation

b) Operation temperature

c) Variation of K-factor

d) Spray obstacles

e) Lodgement

f) Thermal sensitivity

Annex L
(informative)

Special technology

This European Standard covers only the types of sprinkler specified in EN 12259-1. During the years preceding the preparation of this standard special technologies were being developed for special applications, including in particular the following:

TB209
TB222
TB223

— Early suppression fast response sprinklers (ESFR);

— Large drop sprinklers;

— Residential sprinklers;

— Extended coverage sprinklers;

— Special in-rack sprinklers.

The engineering of such applications is currently very specialized. It is intended that they will be included in future editions of this standard.

Annex M
(informative)

[A1] Independent certification body

It is usual in European countries, for companies given the responsibility to design, install and maintain sprinkler systems in accordance with this current European Standard, to be certified in this field by an independent certification body. [A1]

[A1⟩ *deleted text* ⟨A1]

Bibliography

EN ISO 9001 *Quality management systems — Requirements (ISO 9001:2000)*

EN 671, *Fixed fire fighting systems — Hose systems*

blank

BSI - British Standards Institution

BSI is the independent national body responsible for preparing British Standards. It presents the UK view on standards in Europe and at the international level. It is incorporated by Royal Charter.

Revisions

British Standards are updated by amendment or revision. Users of British Standards should make sure that they possess the latest amendments or editions.

It is the constant aim of BSI to improve the quality of our products and services. We would be grateful if anyone finding an inaccuracy or ambiguity while using this British Standard would inform the Secretary of the technical committee responsible, the identity of which can be found on the inside front cover. Tel: +44 (0)20 8996 9000. Fax: +44 (0)20 8996 7400.

BSI offers members an individual updating service called PLUS which ensures that subscribers automatically receive the latest editions of standards.

Buying standards

Orders for all BSI, international and foreign standards publications should be addressed to Customer Services. Tel: +44 (0)20 8996 9001. Fax: +44 (0)20 8996 7001 Email: orders@bsigroup.com You may also buy directly using a debit/credit card from the BSI Shop on the Website http://www.bsigroup.com/shop

In response to orders for international standards, it is BSI policy to supply the BSI implementation of those that have been published as British Standards, unless otherwise requested.

Information on standards

BSI provides a wide range of information on national, European and international standards through its Library and its Technical Help to Exporters Service. Various BSI electronic information services are also available which give details on all its products and services. Contact Information Centre. Tel: +44 (0)20 8996 7111 Fax: +44 (0)20 8996 7048 Email: info@bsigroup.com

Subscribing members of BSI are kept up to date with standards developments and receive substantial discounts on the purchase price of standards. For details of these and other benefits contact Membership Administration. Tel: +44 (0)20 8996 7002 Fax: +44 (0)20 8996 7001 Email: membership@bsigroup.com

Information regarding online access to British Standards via British Standards Online can be found at http://www.bsigroup.com/BSOL

Further information about BSI is available on the BSI website at http://www.bsigroup.com

Copyright

BSI Group
Headquarters 389
Chiswick High Road,
London, W4 4AL, UK
Tel +44 (0)20 8996 9001
Fax +44 (0)20 8996 7001
www.bsigroup.com/
standards

PART 2: Technical Bulletins

Contents

September 2009

TB201: 2009: 1
Suitable sprinkler components and services

TB202: 2009: 1 (replaced by TB201)
Approved sprinkler equipment

TB203: 2009: 1
Care and maintenance of automatic sprinkler systems

TB204: 2003: 1
Sprinkler system grading

TB205: 2003: 1
Consultation and acceptance for sprinkler system approval by fire insurers

TB206: 2004: 2
Passive fire protection of sprinklered buildings

TB207: 2005: 1
The selection of sprinkler heads

TB208: 2009: 1
Supplementary requirements for sprinkler installations which can operate in the dry mode

TB209: 2005: 1
ESFR sprinkler protection

TB210: 2009: 1
Automatic sprinkler pump installation

TB211: 2009: 1 (replaced by TB227)
CPVC plastic pipe and fittings

TB212: 2008: 1 (replaced by TB227)
Specifications for pipes and fittings

TB213: 2009: 1
Upkeep and testing of multiple controls

TB214: 2009: 1
Sprinkler protection of flammable liquid stores

TB215: 2009: 1
Sprinkler protection of idle pallet storage

TB216: 2009: 1
Sprinkler protection of aerosols

TB217: 2004: 1
Categorisation of goods in storage

TB218: 2005: 1
Water supply diagrams

TB219: 2004: 1
Sprinkler protection of cold stores

TB220: 2007: 1 (replaced by TB210)
Power supplies for sprinkler pumps

TB221: 2009: 1
Sprinkler protection of schools

TB222: 2009: 1
Ordinary Hazard Group 3 protection using Enhanced Protection Extended Coverage sprinklers

TB223: 2009: 1
Sprinkler protection of concealed spaces in OH3 EPEC sprinklered buildings

TB224: 2009: 1
Sprinkler water storage tanks (cisterns)

TB225: 2009: 1 (withdrawn)
BS EN 12845: 2004

TB226: 2009: 1
Design, installation and maintenance of underground pump chambers

TB227: 2009: 1
Pipework

TB228: 2009: 1
Revision to BS EN 12845 Table 1

TB229: 2009: 1
LPC Rules for automatic sprinkler installations variations to BS EN 12845: 2009

TB230: 2009: 1
Protection of roof spaces, floor and ceiling voids

TB231: 2009: 1
Pipe sizing

TB232: 2009: 1
Sprinkler installation control valve sets

TB233: 2009: 1
Water supplies for life safety systems

Suitable sprinkler components and services

Relates to BS EN Clause 3.77

TB201.1 SUITABLE SPRINKLER COMPONENTS

Where available, sprinkler equipment which has been tested and approved for use by nationally accredited, independent, third-party approvals organisations should be used.

In the case of the UK, United Kingdom Accreditation Service (UKAS) is responsible for the accreditation of test and certification bodies.

UKAS maintains a directory of accredited UK certification bodies and also lists such information on its website, *www.ukas.com*. On this website, it is possible to browse or search for accredited bodies with particular areas of expertise, for example: *http://www.ukas.com/CertificationBodiesSearch.asp* using keyword 'sprinkler' will reveal body(s) with the word 'sprinklers' in their accreditation schedules.

The Loss Prevention Certification Board (LPCB) is an example of such a body and lists approved products in a specifiers' guide, see *http://www.redbooklive.com/*

Components or equipment having a European Technical Approval issued by an appropriate notified body may be acceptable, providing the authorities having jurisdiction (see BS EN Clause 3.13) and all interested parties have been consulted and agree to their use.

TB201.2 HARMONISED SPRINKLER COMPONENT SPECIFICATIONS

Table TB201.T1 identifies sprinkler products and assemblies commonly used and identifies those for which harmonised standards exist.

Table TB201.T1 Sprinkler products and assemblies

Component	Standard	Status[1, 2, 3, 4]	LPC Rules Ref
Sprinklers (EN 12845: 2009)	EN 12259-1	Harmonised standard[5]	BS EN Clause 14
Sprinklers (*LPC Rules for automatic sprinkler installations*)	LPS 1039[7]	Sprinklers outside the scope of EN 12259: Part 1[6]	TB209, TB222
Alarm valve assemblies – wet	EN 12259-2	Harmonised standard	BS EN Clause 15.1
Alarm valve assemblies – dry	EN 12259-3	Harmonised standard	BS EN Clause 15.1
Water motor alarm gongs	EN 12259-4	Harmonised standard	BS EN Clause 16.1.1
Water flow detectors	EN 12259-5	Harmonised standard	BS EN Clause 16.2.1
Pipe couplings	prEN 12259-6 LPS 1219[7]	Not a mandated item	
Pipe hangers	prEN 12259-7 LPS 1194[7]	Not a mandated item	BS EN Clause 17.2
Pressure switches	prEN 12259-8	Mandated work item	BS EN Clause 16.2
Multiple controls	prEN 12259-10	Mandated work item	
Medium and high velocity water sprayers	prEN 12259-11	Not a mandated item	
Pumps	prEN 12259-12	Mandated work item Standard in preparation	
Pumpsets – automatic	LPS 1131[7]	Mandated work item	
Flow meters – direct reading	LPS 1045[7]	Not a mandated item	
Safety valves for pressure tanks		Not a mandated item	
Suction tanks	LPS 1276[7]	Not a mandated item	
Vortex inhibitors for pump suction inlets	(Draft) LPS 2070[7]	Not a mandated item	
Flexible connectors	LPS 1261[7]	Not a mandated item	

Note 1: 'Harmonised standard' is a European standard, adopted by CEN, CENELEC or ETSI, following a mandate issued by the European Commission after consultation with Member States. Compliance with harmonised standards, of which the reference numbers have been published in the *Official Journal* and which have been transposed into national standards, provides presumption of conformity to the corresponding essential requirements of the EC directives. Compliance with harmonised standards remains voluntary, and manufacturers are free to choose any other technical solution that provides compliance with the essential requirements.
Note 2: 'Standard in preparation' is a draft European standard for which a European Commission mandate has been issued but which has not yet been published or harmonised.
Note 3: 'Mandated work item' is a work item included in the mandate but not yet included in the work programme
Note 4: 'Not a mandated item' is a product for which there is currently no mandate and which is not on the CEN work programme.
Note 5: EN 12259: Part 1: 1999 Amendment Nos. 1, 2 and 3 and Corrigendum No. 1 is limited to sprinkler types specified in EN 12845: 2009.
Note 6: A number of sprinklers types which are beyond the scope of EN 12845: 2009 are in common usage with the *LPC Rules for automatic sprinkler installations*, see TB207, ESFR (TB209), EPEC (TB222) and K160 sprinklers.
Note 7: Or equivalent specification.

TB201.3 SUITABLE SPRINKLER SERVICES

Sprinkler systems within the United Kingdom shall be contracted by either a:

(i) certified sprinkler installer or supervising body assessed to LPS 1048, Section 3 and certified to ISO 9001;

or

(ii) registered supervised sprinkler installer assessed to LPS 1048, Section 5;

or

(iii) sprinkler installer, either certified or registered and supervised to schemes equivalent to (i) or (ii) above.

Approved sprinkler equipment

TB202 has been replaced by TB201

Care and maintenance of automatic sprinkler systems

Replaces BS EN Clause 20
Implementation date: this Technical Bulletin should be implemented for all maintenance contracts let (or renewed) from 1 January 2010. Where all stakeholders agree, it may be used immediately.

TB203.0 BACKGROUND AND INTRODUCTION

A satisfactory sprinkler system maintenance regime including a thorough review of hazard is critical to the continued dependable performance of all sprinkler systems.

This Technical Bulletin outlines procedures for care and maintenance of sprinkler systems to ensure that they remain fully operational and that periodic assessments are carried-out to verify that protection is appropriate to the hazards.

This Technical Bulletin intends to re-introduce optimum requirements for maintenance derived from a selection of practices from the previous BS 5306-2 edition of the *Sprinkler rules* and new recommendations from the industry.

This issue of TB203 replaces TB203: 2004 and should be applied in place of BS EN 12845: 2003 Clause 20 'Maintenance' and BS EN 12845: 2004 Clause 20 'Maintenance'.

This version of TB203 has adopted the same headings and structure as BS EN 12845 Clause 20 'Maintenance'. The paragraph numbering system is also equivalent where the content of the two documents are similar, for example:

- BS EN 12845 Clause 20.1 'General' → TB203.1 'General';
- BS EN 12845 Clause 20.2 'Users' programme of inspection and checking' → TB203.2 'Users' programme of inspection and checking arrangements'; and
- BS EN 12845 Clause 20.3 'Service and maintenance schedule' → TB203.3 'Service and maintenance schedule'.

This Technical Bulletin should also be read in conjunction with the following parts of BS EN 12845:

- Clause 19 'Commissioning'.
- Annex J 'Precautions and procedures when a system is not fully operational'; and
- Annex F 'Special requirements for life safety systems'.

TB203.0.1 Definitions

TB203.0.1.1 Three-year tank

A suction tank designed and protected against corrosion such that the need for emptying the tank for maintenance is reduced to a period of not less than three years.

TB203.0.1.2 Ten-year tank

A suction tank designed and protected against corrosion such that the need for emptying the tank for maintenance is reduced to a period of not less than ten years.

TB203.0.1.3 *Alarm receiving station*

An alarm receiving station approved to Loss Prevention Standard LPS 1020 or equivalent, for transmission of fire signals to the fire authority within which the sprinklered property is situated.

TB203.0.1.4 *Approved sprinkler contractor*

A sprinkler installing company certificated to an appropriate level to Loss Prevention Standard LPS 1048 or to an equivalent scheme.

TB203.0.1.5 *Certificate of Conformity (C of C)*

A certificate issued by a nationally accredited approval and certification body or an approved sprinkler contractor, verifying compliance with defined installation rules and recording any non-compliances.

TB203.0.1.6 *Fire safety official*

The employee or agent of the owner or user of the sprinkler system(s) nominated to undertake specified tasks relating to the upkeep of the sprinkler protection.

TB203.0.1.7 *Inspection*

A visual inspection of a sprinkler system or portion thereof, to verify that it appears to be in operating condition and is free from physical damage.

TB203.0.1.8 *Insured*

Person or persons, companies or bodies corporate who may be either or both owners or occupiers of the sprinkler protected premises, and who have an insurable interest in the building, contents or business interruption risk.

TB203.0.1.9 *Sprinkler servicing contractor*

An approved sprinkler contractor with servicing as part of their approval scope appointed by the user to undertake a test, service and maintenance schedule to TB203.3.

TB203.0.1.10 *Sprinkler protection user*

The person responsible for or having effective control over the sprinkler system provision and its upkeep.

TB203.0.1.11 *Weekly test card*

Record card(s), giving both specific advice and space for recording of weekly testing of sprinkler system alarms and quarterly testing of water supplies.

TB203.1 GENERAL (REVISIONS TO BS EN CLAUSE 20.1)

TB203.1.1 Programmed work

The user shall ensure that a programme of inspection and checks is carried out (see TB203.2), arrange a test, service and maintenance schedule (see TB203.3 and TB203.4) and keep records, including a logbook, which shall be held on the premises.

The user shall arrange for the test, service and maintenance schedule to be carried out under contract by a sprinkler servicing contractor.

Any alarm receiving station(s) shall be notified of any system tests which will result in the transmission of an alarm. The alarm receiving station(s) shall be requested to verify that alarm signal(s) have been received. The alarm receiving station(s) shall be informed immediately that the test procedures have been completed.

After an inspection, check, test, service or maintenance procedure the system, and any automatic pumps, pressure tanks and gravity tanks shall be returned to the normal operational condition.

Where manufacturers recommend more frequent servicing and maintenance of their products than required by this Technical Bulletin, their recommendations shall be complied with.

COMMENTARY AND RECOMMENDATIONS ON TB203.1.1

Where certificates of conformity have been issued for the system, the requirements of the certificate of conformity issuer shall be observed in order to maintain the certificate validity.

If appropriate, the user should notify interested parties of the intent to carry out tests and/or of the results.

TB203.1.2 Precautions while carrying out work

See BS EN 12845 Annex J for precautions to be taken while the system is not operational or after a sprinkler operation.

TB203.1.3 Replacement sprinklers

A stock of spare sprinklers shall be kept on the premises as replacements for operated or damaged sprinklers. Spare sprinklers, together with sprinkler spanners as supplied by the supplier, shall be housed in a cabinet or cabinets located in a prominent and easily accessible position where the ambient temperature does not exceed 27°C.

The number of spare sprinklers per system shall be no less than:

(a) 6 for Light Hazard (LH);

(b) 24 for Ordinary Hazard (OH);

(c) 36 for High Hazard, Process (HHP) and High Hazard, Storage (HHS).

The stock shall be replenished promptly after spares are used.

Where installations contain high-temperature sprinklers, sidewall or other variations such as different orifice sizes, sprinkler patterns or contain multiple controls, the spares shall incorporate an appropriate proportion of these types of products.

TB203.1.4 Pressure bearing components

Inspection, testing and maintenance of pressure tanks and pressure bearing components shall fulfil the national requirements for pressure equipment.

The UK national requirement is:

The Pressure Equipment Regulations 1999

http://www.opsi.gov.uk/si/si1999/19992001.htm

Pressure Equipment (Amendment) Regulations 2002

http://www.opsi.gov.uk/si/si/2002/20021267.htm

which implements the common European approach:

European Pressure Equipment Directive 97/23/EC

http://ec.europa.eu/enterprise/sectors/pressure-and-gas/documents/ped/index_en.html

TB203.1.5 Sprinklers

Sprinklers subjected to contamination, such as those in spray booths, may require frequent attention and replacement may be necessary.

TB203.2 USERS' PROGRAMME OF INSPECTION AND CHECKING (REVISIONS TO BS EN CLAUSE 20.2)

TB203.2.1 General

The installer shall provide the user with a documented inspection and checking procedure for the system. The programme shall include instruction on the action to be taken in respect of faults, operation of the system, with particular mention of the procedure for emergency manual starting of pumps, and details of the weekly routine of TB203.2.2.

TB203.2.2 Weekly routine

TB203.2.2.1 General

Each part of the weekly routine shall be carried out at intervals of no more than seven days.

TB203.2.2.2 Checks

The following shall be checked and recorded:

(a) all water and air pressure gauge readings on installations, trunk mains and pressure tanks;

(b) all water levels in elevated private reservoirs, rivers, canals, lakes, water storage tanks (including pump priming water tanks and pressure tanks);

(c) the correct position of all stop valves which control the flow of water to the sprinkler system(s) from the water supply, up to and including the installation control valves stop valves but excluding the water undertaker's stop valve on a town main supply to the system.

COMMENTARY AND RECOMMENDATIONS ON TB203.2.2.2

The air pressure in the pipework in dry, alternate and pre-action installations should not fall at a rate of more than 1,0 bar per week or at a rate specified by the manufacturer, whichever is the lesser.

TB203.2.2.3 Water motor alarm test

Each water motor alarm shall be sounded for no less than 30s.

TB203.2.2.4 Automatic pump starting test

Tests on automatic pumps shall include the following;

(a) water pressure on the starting device shall be reduced, thus simulating the condition of automatic starting;

(b) when the pump starts, the starting pressure shall be checked and recorded;

(c) check that there is cooling water flowing through open circuit cooling systems

(d) check diesel pump oil pressure;

(e) fuel and engine lubricating oil levels in diesel engines shall be checked;

(f) check the correct operation of any automatic ventilation louvres.

TB203.2.2.5 Diesel engine restarting test

Immediately after the pump start test of TB203.2.2.4, diesel engines shall be tested as follows:

(a) the engine shall be run for 30 minutes, or for the time recommended by the supplier. The engine shall then be stopped and immediately restarted using the manual start test button;

(b) the water level in the primary circuit of closed circuit cooling systems shall be checked.

Oil pressure (where gauges are fitted), engine temperatures and coolant flow shall be monitored throughout the test. Oil hoses shall be checked and a general inspection made for leakage of fuel, coolant or exhaust fumes.

TB203.2.2.6 *Trace heating and localised heating systems*

Heating systems to prevent freezing in the sprinkler system shall be checked for correct function.

TB203.2.2.7 *Fire and rescue service and remote central station alarm connection*

The equipment for automatic transmission of alarm signals from a sprinkler installation to a fire and rescue service or remote manned centre (see BS EN 16.3) shall be checked for:

(a) continuity of the connection; and

(b) continuity of the connection between the alarm switch and the control unit, if the circuits are continuously monitored.

TB203.2.3 Monthly routine

TB203.2.3.1 *General*

Each part of the monthly routine shall be carried out at intervals of no more than one calendar month in addition to the tasks identified in the weekly routine (TB203.2.2).

TB203.2.3.2 *Batteries*

Check the electrolyte level of all battery cells, (including diesel engine starter batteries and those for control panel power supplies) and carry out all other maintenance procedures specified by the battery manufacturer. Check the battery charging voltage and make sure it has not changed. Report any changes to the sprinkler service contractor.

TB203.2.3.3 *Water storage tank security*

The access ladder to all sprinkler water storage tanks shall be checked for correct housing and security and any tank ball valve covers shall be secured and locked.

TB203.3 SERVICE AND MAINTENANCE SCHEDULE (REVISIONS TO BS EN CLAUSE 20.3)

TB203.3.1 General

The tasks identified in this section shall be undertaken by a competent person, eg by an engineer from a sprinkler servicing contractor.

TB203.3.1.1 *Procedures*

In addition to the schedule given in this clause any procedures recommended by component suppliers shall be carried out.

Diesel engines shall be serviced and maintained in accordance with the manufacturers' recommendations.

TB203.3.1.2 *Records*

A signed, dated report of the inspection shall be provided to the user and shall include advice of any rectification carried out or needed, and details of any external factors, eg weather conditions, which may have affected the results.

TB203.3.2 Quarterly routine

TB203.3.2.1 *General*

The following checks and inspections shall be made at intervals of no more than 13 weeks, and shall include all the tasks identified in the weekly (TB203.2.2) and monthly (TB203.2.3) routines.

TB203.3.2.2 *Review of hazard*

The effect of any changes of structure, occupancy, storage configuration, heating, lighting or equipment of a building or hazard classification or installation design shall be identified in order that the appropriate corrective action may be taken immediately.

The review shall be carried out by one of the following procedures:

(a) an inspection by a competent person, for example by an engineer from a sprinkler servicing contractor; or

(b) the user shall submit a completed return to the sprinkler servicing contractor detailing any changes as specified in TB203.3.2.3.

COMMENTARY AND RECOMMENDATIONS ON TB203.3.2.2

Review of hazard should be a continuous process undertaken by the user. Where changes occur that might change the effectiveness of the sprinkler protection, immediate remedial action should be taken. At quarterly intervals the process should be formalised either by a review by a competent person or by submission of a completed return to the sprinkler servicing contractor responsible for the review of hazard during the yearly routine as specified in TB203.3.4.

The quarterly review of hazard may be undertaken by a competent person who is not an employee of the user, for example an engineer from a sprinkler servicing contractor.

TB203.3.2.3 *Details*

The entire premises should be checked thoroughly during the review of hazard which shall include the following:

- Have any structural alterations been made since the last review which necessitate modifications to the sprinkler system (including low level office installation and partition relocation)?
- Are there any new buildings, mezzanines or extensions?
- Has there been a change of use to all or any part of the protected building?
- Is the ambient temperature range still within acceptable limits for the design of the sprinkler system?
- Has any painting or decoration been undertaken since the last inspection?
- Are frost protection measures adequate?
- Have there been any significant changes to plant or equipment (quantity and location), or changes in production?
- Is the storage type still consistent with the sprinkler system design (ie free-standing storage has not changed to rack storage)?
- Is the design of the rack sprinklers consistent with the storage category?
- Are flues (horizontal and vertical) within the storage racks kept clear as designated by the design requirements?
- Are minimum clearances maintained between stored items and sprinkler heads (See BS EN Clause 12.1 and 12.5.1)?
- Has the nature of goods stored or their packaging changed? Does this alter the category of stored goods?
- Have there been any changes to storage arrangements (plastic pallets, shelving, drum dollies, boxes or totes)?
- Have there been any changes in storage height?
- Where a smoke or heat detector system interacts with a sprinkler system, is a suitable maintenance contract in force?
- Have there been any problems with the sprinkler system?
- Have there been any alterations to the sprinkler system?

TB203.3.2.4 *Flow switches*

Flow switches on life safety systems shall be checked for correct function.

COMMENTARY AND RECOMMENDATIONS ON TB203.3.2.4

Flow switches in life safety systems may be in inaccessible locations and therefore difficult to test, flow switch functional tests in life safety systems should be carried out by a competent person, for example an engineer from a sprinkler servicing contractor.

TB203.3.3 Half-yearly routine

TB203.3.3.1 *General*

The following checks and inspections shall be made at intervals of no more than six months and shall include all the tasks identified in the weekly (TB203.2.2), monthly (TB203.2.3) and quarterly (TB203.3.2) routines.

TB203.3.3.2 *Alarm valves*

The moving parts of dry alarm valves, pre-action valves, and any accelerators and exhausters, shall be exercised in accordance with the suppliers' instructions.

TB203.3.3.3 *Water supplies*

Each water supply shall be tested to verify pressure and flows.

Where flow test equipment is installed at the installation control valve sets, they shall be tested to verify the pressures and flows specified are achieved.

Pump(s) if fitted shall start automatically. It shall be verified that both pump starting pressure switches operate correctly.

Each water supply pump in the installation shall be tested at the full load condition (by means of the test line connection coupled to the pump delivery branch downstream of the pump outlet non-return valve) and shall give the pressure/flow values stated on the nameplate.

Appropriate allowances shall be made for pressure losses in the supply pipe and suction tank head gain.

Low water level switches in suction lift header tanks shall be tested for correct function.

TB203.3.3.4 *Electrical supplies*

Any secondary electrical supplies from diesel generators or other sources shall be verified by the user to the sprinkler service contractor to be operating satisfactorily.

TB203.3.3.5 *Stop valves*

All stop valves controlling the flow of water to sprinklers shall be operated to ensure that the stop valve and any monitoring are in working order, and securely refastened in the correct mode. This shall include the stop valves on all water supplies, at the alarm valve(s) and all zone or other subsidiary stop valves.

TB203.3.4 Yearly routine

TB203.3.4.1 *General*

The following checks and inspection shall be made at intervals of no more than 12 months and shall include all the tasks identified in the weekly (TB203.2.2), monthly (TB203.2.3), quarterly (TB203.3.2) and half yearly (TB203.3.3) routines.

TB203.3.4.2 *Diesel engine failed-to-start test*

The failed-to-start alarm shall be tested to be in accordance with TB210.9.7.2.

Immediately after this test, the engine shall be started using the manual starting system.

TB203.3.4.3 *Float valves on water storage tanks*

Water storage tank float valves shall be maintained in accordance with the manufacturers' instructions and checked to ensure they function correctly.

TB203.3.4.4 *Review of hazard*

Where the quarterly review of hazard (TB203.3.2.2) takes the form of returns submitted by the user, at least one review per year shall be carried out by a site visit by a competent person, for example an engineer from a sprinkler servicing contractor reporting on details defined in clause TB203.3.2.3.

TB203.3.4.5 *Sprinklers, multiple controls and sprayers*

Sprinklers, multiple controls and sprayers affected by deposits (other than paint) shall be carefully cleaned. Painted or distorted sprinkler heads, multiple controls or sprayers shall be replaced.

Any petroleum jelly coatings shall be checked. Where necessary the existing coatings shall be removed and the sprinklers, multiple controls or sprayers shall be coated twice with petroleum jelly (in the case of glass bulb sprinklers to the sprinkler body and yoke only).

TB203.3.4.6 *Pipework and pipe supports*

Pipework and hangers shall be checked for integrity and condition and rectified or replaced as necessary.

Bitumen-based paint on pipework, including the threaded ends of galvanized pipework and hangers, shall be renewed as necessary.

Protective wrapping on pipes shall be repaired as necessary.

Verify with the user that the sprinkler system is satisfactorily earthed. Sprinkler pipework shall not be used for earthing electrical equipment and any earthing connections from electrical equipment shall be removed and alternative arrangements made.

COMMENTARY AND RECOMMENDATIONS ON TB203.3.4.6

Bitumen-based paint may need renewal at intervals varying from one to five years, according to the severity of the conditions.

TB203.3.4.7 *Replacement parts*

The number and condition of replacement parts held as spare shall be checked.

TB203.3.4.8 *Fire and rescue service and remote central station alarm*

The electrical installation shall be checked.

TB203.3.4.9 *Water supply stop valves, alarm and non-return valves*

All water supply stop valves, alarm and non-return valves shall be examined and replaced or overhauled as necessary.

TB203.3.4.10 *Pump suction chambers and screens*

In natural water supplies, settling chambers and screens shall be taken out and inspected as necessary.

TB203.3.4.11 *Flow switches*

Flow switches, other than those fitted to satisfy life safety system requirements (see TB203.3.2.4), shall be checked for correct function.

TB203.3.5 Three-yearly routine

TB203.3.5.1 General

The following checks and inspections shall be made at intervals of no more than three years and shall include all the tasks identified in the weekly (TB203.2.2), monthly (TB203.2.3), quarterly (TB203.3.2), half yearly (TB203.3.3) sections and yearly (TB203.3.4) routines.

TB203.3.5.2 Water storage tanks and cisterns

(a) 'Three-year tanks' shall be:

(1) drained;

(2) cleaned as necessary;

(3) examined internally and externally for corrosion and fitness for purpose;

(4) have the fabric attended to as necessary and restored in accordance with the manufacturers' recommendations,

(b) 'Ten-year tanks' shall be:

(1) inspected and examined, if any repairs are necessary they shall be carried out in accordance with the manufacturers' recommendations;

(2) if the condition or cleanliness of the tank indicate the need, the tank shall be drained, cleaned and have the fabric attended to as necessary and restored in accordance with the manufacturers' recommendations.

TB203.3.5.3 Pump suction chambers, screens and strainers

In natural water supplies, pump suction strainers and settling chambers and their screens shall be inspected and cleaned as necessary.

TB203.3.5.4 Foot valves

Foot valves shall be serviced

TB203.3.6 Ten-yearly routine

At no more than ten-year intervals, 'ten-year tanks' shall be:

(1) drained;

(2) cleaned as necessary;

(3) examined internally and externally for corrosion and fitness for purpose;

(4) have the fabric attended to as necessary and restored in accordance with the manufacturers' recommendations.

TB203.4 SPRINKLER SYSTEM USER PERSONNEL

TB203.4.1 Appointment of fire safety official by the sprinkler system user

The sprinkler system user shall appoint a competent person who shall be nominated to undertake specified tasks relating to the sprinkler system care and maintenance, who shall receive formal training and instructions, whether permanent or contract staff.

TB203.4.2 Staff responsible for weekly testing and emergency actions

Only appropriately trained personnel shall be permitted to undertake weekly testing of sprinkler systems or emergency actions.

COMMENTARY AND RECOMMENDATIONS ON TB203.4.2

It is important that the appropriate staff, including security staff, within a sprinklered property are given suitable levels of instruction on at least the following:

(a) the purpose of the sprinkler system;

(b) how the system operates in the event of a fire;

(c) what to do if the system operates either in a fire or accidentally;

(d) keeping sprinkler heads clear of obstruction;

(e) the avoidance of damage to sprinkler heads and pipework; and

(f) upkeep of records and documentation.

TB203.5 MAINTENANCE OF DOCUMENTATION

TB203.5.1 Record keeping

Appropriate records including the sprinkler system log book or folder shall be kept on site in a safe and secure location. When requested by the insurer, the records shall be made available by the fire safety official for inspection.

The records shall include the log book or folder for the sprinkler system containing the following information:

(1) finished drawings and hydraulic data/calculations;

(2) proprietary equipment specifications, data sheets, and maintenance requirements, including pump data provided by the pumpset supplier;

(3) maintenance, inspection and test schedules;

(4) where appropriate, the weekly test card;

(5) the sprinkler servicing contractor records and reports;

and, where issued:

(6) Certificates of Conformity.

TB203.5.2 Upkeep of records

The records shall be kept up to date. Where changes are made, the following shall be recorded by an appropriate means (for example, by appending to or modifying existing documentation)

(a) details of all alterations;

(b) details of all work and inspections carried out on the sprinkler system;

(c) details of any hazard analysis relevant to the sprinkler protection;

(d) a full and up to date list of emergency contacts, including:

- insurers (both landlord and tenants);
- insurance brokers;
- the property owner or their agent;
- sprinkler servicing company;
- the sprinkler installer;
- the pump suppliers or pump maintenance company;
- electrical contractor;
- alarm receiving station contact numbers;
- suction tank manufacturers;
- sprinkler monitoring equipment.

(e) details of calls to and from the central alarm station, taking the station off watch, restoring the station back on watch and notification of alarms or faults. The details recorded shall include, at least, the nature of the event, date and time of the call, the name of the caller and recipient, and the alarm receiving station reference.

(f) details of staff training.

TB203.6 PLANNING FOR MAINTENANCE

Where maintenance of a sprinkler system or building fabric is anticipated that will result in impairment of the sprinkler protection, a written maintenance plan shall be prepared by the user and agreed with the authorities prior to commencement of the maintenance work. The requirements of BS EN Annex J 'Precautions and procedures when a system is not fully operational' shall be met. If the system is for life safety, see also the requirements of BS EN Annex F 'Special requirements for life safety systems'.

The following procedures shall be included in the plan:

Before maintenance begins

(1) notification of the authorities (including the insurers) and any central alarm station;

(2) designation of named personnel to undertake specified tasks;

(3) identification of resources required for the maintenance period;

(4) consultation with key personnel;

(5) inspection and review of passive and other active fire protection measures (including fire doors, gaseous extinguishing systems and portable fire extinguishing appliances);

(6) rectification of impaired passive and active fire protection measures;

(7) reduction of stocking levels of hazardous goods (eg flammable liquids, aerosols with flammable contents);

(8) notification to the sprinkler servicing contractor of the company procedures and regulations with which they are required to comply (eg work permits, hot work prohibitions);

(9) considerations to minimising the area of coverage isolated at any one time;

(10) the provision and review of a written method statement prepared by the sprinkler servicing contractor;

(11) procedures ensuring all the necessary tools, equipment and trained personnel are available;

(12) consultation with staff about the work plan, increasing awareness and precautionary measures;

(13) procurement and placement of additional portable fire extinguishing appliances in the affected areas, ensuring that personnel are trained in their use;

(14) issue of permits to commence work;

While maintenance work is in progress

(15) suspension of operations, in particular any hazardous processes, machinery and plant;

(16) smoking controls;

(17) implementation of regular fire patrols;

During and after re-commissioning the system

(18) hydrostatic pressure testing of modified pipework or pipework extensions;

(19) water supply performance tests if changes have been made to the water supply or the water supply connections;

(20) notification to all key staff, authorities and the alarm receiving station of the reinstatement of the sprinkler protection;

(21) checks to establish that all valves, switches and other equipment have been restored to their correct stand-by setting;

(22) provision of a written statement or certificate by the sprinkler servicing contractor and countersigned by the system user signifying that the work has been completed and that the system is fully operational; and

(23) revalidation of any Certificate of Conformity.

COMMENTARY AND RECOMMENDATIONS ON TB203.6

Statements and certificates should be filed in the sprinkler system log book.

TB203.7 ACTION ON ALARM AND/OR SPRINKLER OPERATION (SUPPLEMENTS BS EN ANNEX J.4)

TB203.7.1 When the alarm sounds

(a) staff should be instructed to call the fire and rescue service on hearing the alarm and follow the normal fire procedure for the premises. The fire and rescue service should be called, even if there is an automatic fire and rescue service connection, in order to confirm that a call has been received;

(b) only after carrying out (a) should the cause of the alarm be investigated if it appears safe to do so;

(c) on no account (other than the express command of the fire and rescue service) should sprinkler stop valves be closed unless it is certain that there is no fire or that it is out. Even if an extinguished fire is found in one area, the whole building should be searched before the valve is turned off – there may be more than one seat of fire; and

(d) the decision to shut down an installation or zone which has operated because of a fire should be taken only by the fire and rescue service.

TB203.7.2 Reinstatement

Following shutdown after operation of an installation, the operated sprinkler heads shall be replaced by heads of the correct type and temperature rating, and the water supply restored. Unopened sprinklers around the area in which operation took place shall be checked for damage by heat or other cause and replaced as necessary.

TB203.7.3 False alarms

Leaks and damaged sprinkler heads can cause the alarm to sound. Repair and reinstatement should be carried out immediately.

False alarms can also be caused by pressure surges in town main water supplies. If this problem occurs the fire insurer should be consulted and the sprinkler servicing contractor should be asked to modify the system as necessary.

TB203.7.4 Actions following sprinkler operation

Components removed from the system should be retained by the user for possible examination by an authority.

TB203.7.5 Incident report

The fire insurer should be informed of any incident whether or not an insurance claim is made.

Sprinkler system grading

Relates to BS EN Clause 9.6

TB204.1 GENERAL

For insurance purposes sprinkler systems shall be designated: Grade I, Grade II or Grade III, according to the number and type of water supplies.

TB204.2 GRADE I

A Grade I system shall have either:

(a) duplicate water supplies (see BS EN Clause 9.6.3);

or

(b) one superior water supply (see BS EN Clause 9.6.2) provided that the total number of sprinklers fed by the supply does not exceed 2000 (excluding those in concealed spaces), and that there are not more than 200 sprinklers (excluding those in concealed spaces) in any single fire compartment. A fire compartment shall be separated by fire-resisting construction complying with TB206.

TB204.3 GRADE II

A Grade II system shall have one superior water supply (see BS EN Clause 9.6.2)

COMMENTARY AND RECOMMENDATIONS ON TB204.3

The limitations on installation size specified for Grade I systems do not apply.

TB204.4 GRADE III

A Grade III system shall have:

(a) a town main water supply (see BS EN Clause 9.2); or

(b) an automatic pump complying with the requirements of BS EN Clause 10 and with the water source requirements of BS EN Clause 9.6.

COMMENTARY AND RECOMMENDATIONS ON TB204.4

High Hazard, Process (HHP) and High Hazard, Storage (HHS) class occupancies shall not normally employ Grade III water supplies. However, high hazard systems having a Grade III single water supply may be acceptable depending on the value at risk and the appropriate pressure/flow requirements being achieved, and provided that:

(a) Prior agreement is obtained from the fire insurer; and

(b) (i) The stack height and minimum design density over the area of operation are in compliance with Table TB204.T1

or

(ii) High Pile Storage areas, including any spaces and aisleways, do not exceed 300m² and heights do not exceed 7m;

or

(iii) HHP risk areas do not exceed 300m².

Table TB204.T1 Grade III water supplies for high hazard occupancies							
	Stack height not exceeding				Minimum design density	Area of operation	
Category	I	II	III	IV		m^2	m^2
	m	m	m	m	mm/min	Wet pipe systems	Alternate or dry pipe systems
Free standing storage (ST1)	4,4	3,3	2,3	1,3	7,5	260	325
All other forms of storage	3,9	2,9	1,9	1,3	7,5	260	325

Consultation and acceptance for sprinkler system approval by fire insurers

Relates to BS EN Clauses 3.13, 4 and 19

TB205.1 CONSULTATION

It is essential that the fire insurer be consulted at appropriate stages in the planning and construction of a sprinkler system or alteration of an existing sprinkler system where sprinkler protection is a prerequisite of the acceptance of the risk or where property protection is considered in determining the insurance premium.

COMMENTARY AND RECOMMENDATIONS ON TB205.1

The insured is required to consult the relevant authorities at an early stage in planning the sprinkler protection (see BS EN Clause 4.2). Following the initial consultations the fire insurer may be prepared to assist an insured with the production of an outline sprinkler system specification, helping to ensure the acceptability of the design concept and uniformity of criteria for any competitive tender. The insured should not overlook their responsibility to satisfy the requirements of other interested authorities.

TB205.2 SPRINKLER SYSTEM ACCEPTANCE BY FIRE INSURER

Where acceptance of sprinkler protection measures is sought from an insurer, the following procedures shall be adhered to.

(a) **Estimating or tendering stage**

Tenders from sprinkler contractors shall be submitted to the fire insurer for comment prior to acceptance by the insured and shall include the information required by BS EN Clause 4.3.

(b) **Design stage**

Detail design drawings and supporting data as required in BS EN Clause 4.4 shall be submitted to the fire insurer to obtain approval before erection of the system commences. The insurer shall be consulted at an early stage to establish the time required to review the documentation for approval purposes.

(c) **Inspection and acceptance tests**

The insurer shall be invited to attend an acceptance inspection and to witness testing of the installation control valve(s) and water supplies after the fire engineering sprinkler contractor has satisfactorily completed all commissioning tests (in accordance with BS EN Clause 19.1) and preparation of the completion certificate documents (in accordance with BS EN Clause 19.2).

COMMENTARY AND RECOMMENDATIONS ON TB205.2(c)

Acceptance tests for alternate and dry-pipe installations (as detailed in TB208.4.1) should include timed trip tests to determine the time taken for water to discharge from a remote test/drain facility, simulating the operation of one or more sprinklers with the installation initially in the dry-pipe condition.

Passive fire protection of sprinklered buildings

Replaces BS EN Clauses 5.1, 5.2 and 5.3

TB206.1 SCOPE

This Technical Bulletin replaces BS EN Clauses 5.1 'Buildings and areas to be protected', 5.2 'Storage in open air' and 5.3 'Fire resistant separation'. Due to the nature of the changes the unaltered requirements have been reproduced in full.

TB206.2 GENERAL

The main objective of this Technical Bulletin is to provide the user with guideline fire resistance values for sprinklered and partially sprinklered buildings. This Technical Bulletin is not intended to give detailed requirements and recommendations on all aspects of the passive fire protection of a sprinklered building. For more comprehensive guidance it is strongly recommended that during the design of a sprinklered building, the *LPC Design guide for the fire protection of buildings 2000 (LPC Design guide)* be consulted.

TB206.3 DEFINITIONS

TB206.3.1 Fire resistance (of compartment walls, ceilings and floors)

The ability of an element of building construction to withstand exposure to a standard temperature/time and pressure regime without loss of its fire-separating function (integrity and insulation) or loadbearing capacity or both, for a given time. Except for non-separating elements where BS 476-8: *Fire tests on building materials and structures* is accepted, all fire resistance ratings are expressed in respect of the anticipated performance with respect to BS 476-20, -21, -22, -23 or -24.

TB206.3.2 Occupancy

The building or buildings on the premises which are occupied by the same company irrespective of the occupancy type or types involved, as defined in TB206.3.3 below.

TB206.3.3 Occupancy type

The principal purpose and activity in the building, part of the building and adjoining building(s), as specified in Tables TB206.T1 and TB206.T2.

TB206.4 EXTENT OF FIRE PROTECTION

TB206.4.1 Buildings to be sprinkler-protected (replaces BS EN Clause 5.1)

All areas of a building or a communicating building shall be sprinkler-protected, except in the cases indicated in TB206.4.2.1 and TB206.4.2.2.

COMMENTARY AND RECOMMENDATIONS ON TB206.4.1

Sprinkler protection should also be provided in any neighbouring building which is of more than 150m^3 capacity, and which is within 10m of, and may present an exposure hazard to, any building protected by the system. Where there are unprotected buildings the exposure hazard can be reduced by using cut-off sprinklers over unsealed openings, installed to protect the external surface of any combustible walls.

No part of an unsprinklered building or section should be located vertically below a sprinklered building or section, except as indicated in TB206.4.2.1 and TB206.4.2.2.

BS 5655-1 specifies that lift wells shall not be provided with sprinklers and, to comply with both that standard and this specification, lift wells complying with TB206.4.2.1 are essential.

TB206.4.1.1 *Passive fire protection of and between fully sprinklered compartments*

The fire resistance of sprinklered compartments shall be as given in Table TB206.T1 below. The fire resistance values in Table TB206.T1 apply only where sprinkler protection is provided on both sides of a compartment (exempting those areas specified in TB206.4.2). Where there are areas not sprinkler-protected then passive fire protection shall be in accordance with TB206.4.5 and Table TB206.T2.

Doors and glazed areas between the sprinklered compartments shall be designed in accordance with Parts 4.2 and 4.3 respectively of the *LPC Design guide*. They shall have fire resistance values as given in Table TB206.T1. For a door or glazed area separating two occupancy types requiring different fire resistances, the higher value shall be used. Doors shall be self-closing or be closed automatically in the event of a fire.

Other openings in compartment walls should be protected in accordance with Part 4, 'Protection of Openings and Services' of the *LPC Design guide*.

Table TB206.T1 Recommended fire resistances between fully sprinklered compartments[1]

	Occupancy type[2]	Minimum fire resistance (min)
1a	Residential (domestic) Flat/maisonette	Not covered in TB206
1b/1c	Residential Dwelling house	Not covered in TB206
2a/2b	Residential Institutional and other residential, including hotels	90
3	Office	90
4a 4b	Shop and commercial Retail warehouse and superstore	90 120
5	Assembly and recreation	90
6a 6b	Industrial – OH1 & OH2 Industrial – OH3, OH4 & HHP	90 120
7a 7b	Storage and other non-residential, including HHS Car park for light vehicles	120 Not covered in TB206

Note 1: Taken from the *LPC Design guide for the fire protection of buildings 2000*, Table 2.2 *Compartmentation – recommended fire resistance.*
Note 2: Based on the classification of purpose groups in Table D1 in Appendix D of Approved Document B, The Building Regulations 2000.

TB206.4.2 Exceptions (buildings and parts of buildings not sprinkler-protected)

TB206.4.2.1 *Permitted exceptions (replaces BS EN Clause 5.1.1)*

Sprinkler protection shall be considered in the following cases but may be omitted after due consideration of the fire load in each case:

(a) washrooms and toilets (but not cloakrooms) of non-combustible materials and which are not used to store combustible materials;

(b) enclosed staircases, spaces below stair headings (but not rooms above a stair, and enclosed vertical shafts (eg lifts or service shafts) containing no combustible material and constructed as a fire resistant compartment (see TB206.4.1.1 and TB206.4.5);

(c) rooms protected by other automatic extinguishing systems (eg gas, powder and water spray);

(d) wet processes such as the wet end of paper-making machines

Passive fire protection measures shall be installed in accordance with TB206.4.5 and Table TB206.T2 in any area not sprinkler-protected.

TB206.4.2.2 *Necessary exceptions (replaces BS EN Clause 5.1.2)*

Sprinkler protection shall not be provided in the following parts of a building or plant:

(a) silos or bins containing substances which expand on contact with water;

(b) in the vicinity of industrial furnaces or kilns, salt baths, smelting ladles or similar equipment if the hazard would be increased by the use of water in extinguishing a fire;

(c) areas, rooms or places where water discharge may present a hazard.

COMMENTARY AND RECOMMENDATIONS ON TB206.4.2.2

In these cases, other automatic extinguishing systems should be considered (eg gas or powder).

TB206.4.3 Communicating buildings

Sprinkler protection shall be considered for, but need not be provided in, the following communicating buildings or structures:

(a) a building or storey separated from the sprinklered building by compartment walls of 120 minutes' fire resistance, unless separating an occupancy of types 4b (retail warehouse and superstore), 6b (industrial OH3, OH4 or HHP) or 7a (storage and other non-residential) where the fire resistance shall be 240 minutes as specified in Table 2.2 of the *LPC Design guide*. Any opening in the compartment shall be protected by a single fire door or shutter, or two (arranged in series) fire doors or shutters. In either case, the total fire resistance (of the single or double assembly) shall not be less than that of the compartment. The doors or shutters shall be designed in accordance with Part 4.2 of the *LPC Design guide*;

(b) canopies of non-combustible construction, not extending beyond 2,3m from the building wall. Any such canopy not provided with sprinkler protection shall be fitted with cut-off sprinklers under the canopy over each opening, between it and the sprinklered building. Any opening 2,5m or less in width shall be provided with a cut-off sprinkler, positioned centrally over the opening. Openings exceeding 2,5m in width shall be provided with cut-off-sprinklers over the opening, not more than 2,5m apart and with a sprinkler not more than 1,25m from each side;

(c) exterior loading docks and platforms either of non-combustible construction or with the space beneath closed off against accumulation of debris;

(d) buildings used solely as offices and/or private dwellings. Any part not provided with sprinkler protection shall be separated from the sprinkler-protected building by a compartment wall of not less than 120 minutes' fire resistance in which any glazed areas are of not less than 60 minutes' fire resistance and are provided with cut-off sprinklers, and in which all door openings are protected by either:

(1) single fire doors or single fire shutters of not less than 120 minutes' fire resistance; or

(2) fire doors of not less than 60 minutes' fire resistance and cut-off sprinklers;

(e) buildings, storeys or rooms of non-combustible construction used for wet processes;

(f) stairs, washrooms and WCs external to the sprinkler-protected building, in which all openings to the sprinkler-protected building are protected by doors of not less than 60 minutes' fire resistance;

(g) staircases, washrooms, toilets and WCs external or internal to the sprinkler-protected building which form a means of communication between the sprinklered building and a non-sprinklered building. In any such part not provided with sprinkler protection, all openings into the communicating from the sprinklered and from the non-sprinklered building shall be protected by fire doors of not less than 60 minutes' fire resistance.

COMMENTARY AND RECOMMENDATIONS ON TB206.4.3

Figure TB206.F1 gives an example of where compartmentation between sprinklered and unsprinklered areas/occupancies needs to be maintained. TB206.F1 also illustrates the principle of extending external fire protection either side of a junction between two occupancies or occupancy type. More information on this and other external fire protection matters can be found in Parts 3 and 5 of the *LPC Design guide*.

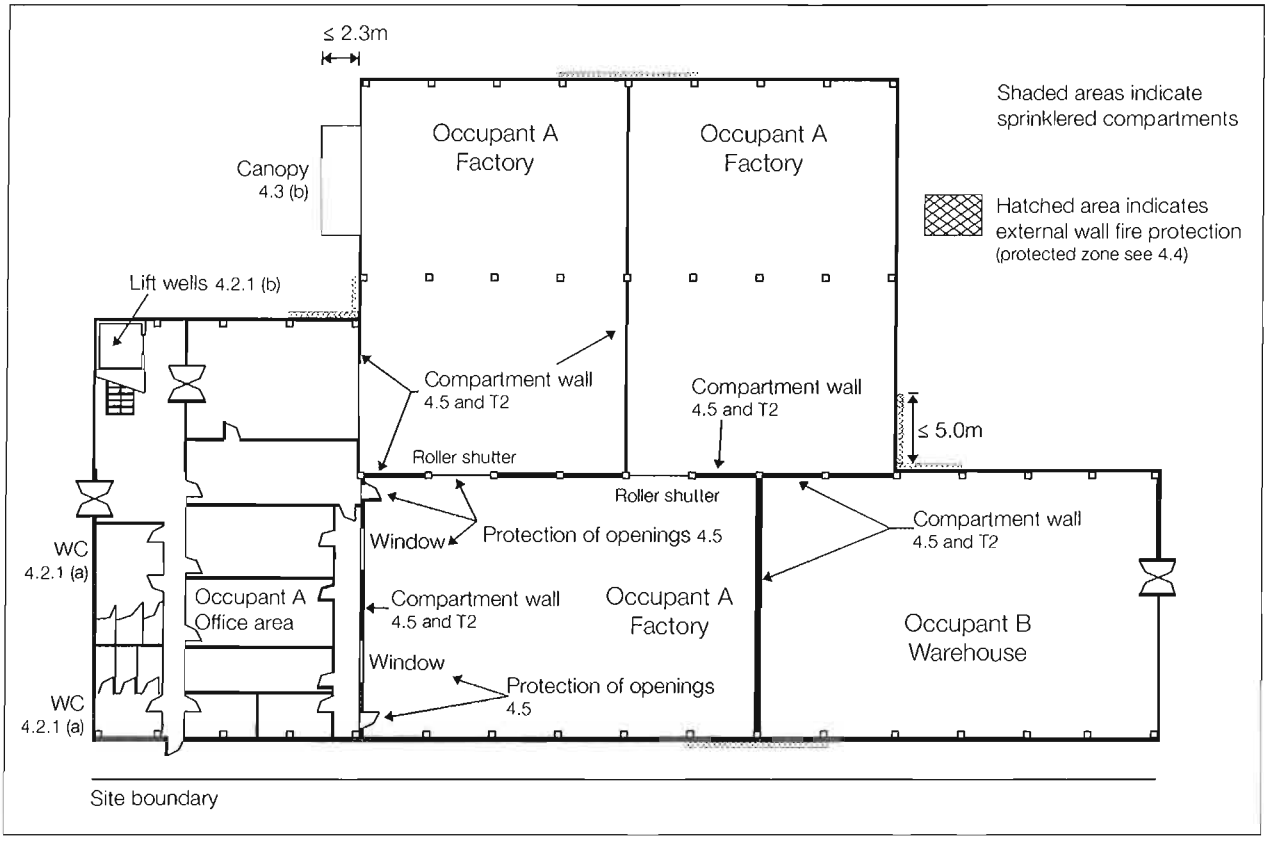

TB206.F1 Plan of factory with integral office block sharing site with warehouse B.
(The numbers are *Design guide* Clause references.)

TB206

TB206.4.4 External fire spread

A protected zone shall be maintained in accordance with Parts 3.3 and 3.4 of the *LPC Design guide* at the junction of an internal compartment wall and an external wall. The *Design guide* Parts 3.3.1.2 and 3.4.3 specify fire resistance requirements of 30 minutes' integrity and 15 minutes' insulation for protected zones.

COMMENTARY AND RECOMMENDATIONS ON TB206.4.4

In order to reduce the risk of horizontal fire spread, the external wall, roof and supporting structures on either side of a compartment wall should be passively fire-protected.

TB206.4.5 Separation of unsprinklered and sprinklered areas within a building

Any area not protected by sprinklers shall be protected by compartment walls, ceilings and floors with fire resistances as given in Table TB206.T2.

Table TB206.T2 Recommended fire resistances between unsprinklered and sprinklered compartments[1]

	Occupancy type[2]	Minimum fire resistance (min)
1a	Residential (domestic) Flat/maisonette	Not covered in TB206
1b/1c	Residential Dwelling house	
2a/2b	Residential Institutional and other residential, including hotels	120
3	Office	120
4a 4b	Shop and commercial Retail warehouse and superstore	120 240
5	Assembly and recreation	120
6a 6b	Industrial – OH1 and OH2 Industrial – OH3, OH4 and HHP	120 240
7a	Storage and other non-residential	240
7b	Car park for light vehicles	Not covered in TB206

Note 1: Taken from the *LPC Design guide for the fire protection of buildings*, Table 2.2. Compartmentation – recommended fire resistance.
Note 2: Based on the purpose groups given in Table D1 of Approved Document B, The Building Regulations 1991.

Openings in compartment walls should be protected in accordance with Part 4 of the *LPC Design guide.*

Doors and glazed areas between the unsprinklered compartment and the sprinklered building shall be designed in accordance with Parts 4.2 and 4.3 respectively of the *LPC Design guide*. They shall have fire resistance values as given in Table TB206.T2 above. For a door or glazed area separating two occupancy types requiring different fire resistances, the higher value shall be used. Doors shall be self-closing or be closed automatically in the event of a fire.

COMMENTARY AND RECOMMENDATIONS ON TB206.4.5

In instances where a fire resistance of 240 minutes is required it is recommended that no glazing be installed between compartments. The installation of glazing with 240 minutes' fire resistance will, in most cases, be impractical due to the high cost involved.

Figure TB206.F1 gives an example of where compartmentation between sprinklered and unsprinklered areas/occupancies needs to be maintained. The figure also illustrates the principle of extending external fire protection either side of a junction between two occupancies or occupancy types. More information on this and other external fire protection matters can be found in Parts 3 and 5 of the *LPC Design guide.*

TB206.5 STORAGE IN THE OPEN AIR

The distance between combustible materials stored in the open air and the sprinkler-protected building shall be no less than 10m or 1,5 times the height of the stored material, whichever is the greater, unless there is a fire resistance separation of at least 60min.

COMMENTARY AND RECOMMENDATIONS ON TB206.5

The fire resistance separation may be achieved with suitable compartmentation or with a suitable exposure protection system.

TB206.6 PUBLICATIONS REFERRED TO

- *LPC Design guide for the fire protection of buildings 2000*, Fire Protection Association, 2000.
- BS 476: *Fire tests on building materials and structures*, British Standards Institution.
- Building Regulations 1991, Approved Document B, *Fire safety* (2000 Edition), Department of the Environment, Transport and the Regions.
- BS 5655-1: *Lifts and service lifts*: *Safety rules for the construction and installation of electric lifts*, British Standards Institution.

The selection of sprinkler heads

Replaces BS EN Clauses 14.2 and 14.5

TB207.1 INTRODUCTION

This Technical Bulletin gives requirements relating to the performance, selection and specification of sprinkler heads; in particular it provides a scheme for the rating and use of sprinkler head thermal sensitivity.

TB207.2 SCOPE

This Technical Bulletin is intended for use in conjunction with BS EN Clause 14. New requirements or changed requirements are identified in the text. Parts of BS EN Clause 14 not dealt with in this Technical Bulletin remain unaltered.

TB207.3 DEFINITIONS

TB207.3.1 EPEC pattern sprinkler

Sprinkler that gives a downward paraboloid pattern of water discharge with high discharge density directly below and adjacent to the sprinkler and a diminishing density with increasing distance from the sprinkler.

TB207.3.2 ESFR pattern sprinkler

Sprinkler that gives a downward paraboloid pattern of water discharge with high momentum and mass flow directly below and adjacent to the sprinkler and a diminishing density with increasing distance from the sprinkler.

TB207.4 SPRINKLER TYPES AND THEIR APPLICATION (REPLACES BS EN CLAUSE 14.2)

TB207.4.1 Sprinklers shall be used for the various hazard classes in accordance with Table TB207.T1 (overleaf) and as specified in TB207.4.2 and TB207.4.3.

Table TB207.T1 Sprinkler types and k factors for various hazard classes (replaces BS EN Table 37)			
Hazard class	Design density mm/min	Sprinkler type	Nominal k factor
Light Hazard (LH)	2,25	Conventional, spray, ceiling, flush, flat spray, recessed, concealed and sidewall	57
Ordinary Hazard (OH)	5,0	Conventional, spray, ceiling, flush, flat spray, recessed, concealed and sidewall	80
		EPEC[2]	115
OH ceiling voids (TB223 only)[3]	5,0	Conventional, ceiling void[4], roof void[4]	80 (or 115)
High Hazard, Process (HHP) and High Hazard, Storage (HHS) ceiling or roof sprinklers	≤ 10	Conventional & spray	80 or 115
	>10	Conventional & spray	115
	>12,5	K160	160
–		ESFR[1]	≥ 200
HHS intermediate sprinklers in high racked storage	–	Conventional, spray & flat spray	80 or 115

Note 1: See TB209.
Note 2: See TB222: *Ordinary Hazard Group 3 protection using Enhanced Performance Extended Coverage [EPEC] sprinkler protection*, and TB223: *Sprinkler protection of concealed spaces in OH3 EPEC sprinklered buldings*.
Note 3: TB223 OH ceiling void protection in combination with EPEC sprinkler protection.
Note 4: Purpose-built sprinklers approved for use in ceiling voids or roof voids.

TB207.4.2 Sidewall pattern (replaces BS EN Clause 14.2.3)

Sidewall sprinklers may be used to protect the following objects and locations:

(a) corridors in High Hazard (HH);

(b) cable ducts;

(c) columns and structural members in Ordinary Hazard (OH) and HH storage facilities;

and for general protection purposes in the following hazards:

(a) Light Hazard (LH), OH1, OH2 and OH3 without storage.

Where sidewall sprinklers are used for general protection purposes they may only be installed under flat ceilings and in accordance with the manufacturers' data sheet.

Note: Sidewall sprinklers shall not be installed in HH installations or OH storage areas or above suspended ceilings for general protection purposes.

TB207.4.3 Extended-coverage horizontal sidewall sprinklers

Extended-coverage horizontal sidewall sprinklers may be used in LH and OH applications, excluding storage areas. Extended-coverage horizontal sidewall sprinklers shall be installed in accordance with the manufacturers' data sheet.

Note: The requirements and recommendations of TB207.3.2 apply to the extended coverage horizontal sidewall pattern sprinkler. Their use should be restricted to rooms with low fire loadings such as hotel bedrooms and individual offices.

TB207.4.4 Shank thread and orifice size relationship

The shank thread nominal size shall be related to the nominal orifice size as given in Table TB207.T2.

Note: The relationship between shank thread and orifice size was intended to prevent inadvertent interchange of orifice sizes when replacing sprinklers in an installation. A number of sprinklers are now in common use that do not conform to the original orifice size/thread size relationship.

Table TB207.T2 Sprinkler nominal orifice and thread sizes and k factors

Sprinkler nominal orifice size mm	Sprinkler shank nominal thread size mm	Mean value of k factor	Limiting values of k factor			
			Dry sprinklers		Sprinklers other than dry	
			minimum	maximum	minimum	maximum
10	10	57	52	62	54	60
15	15	80	74	86	76	84
20[1]	20	115	106	124	109	121
20	15[2]	115	106	124	109	121
k160	20	160	152	168	152	168
k200[3]	20	200	[4]	[4]	194	210
k242[3]	20	[5]	[4]	[4]	[5]	[5]
k320[3]	25	[5]	[4]	[4]	[5]	[5]
k360[3]	25	[5]	[4]	[4]	[5]	[5]

Note 1: Including EPEC pattern sprinklers.
Note 2: See TB207.4.5.
Note 3: ESFR pattern sprinkler.
Note 4: For use in wet-pipe sprinkler installations only.
Note 5: Refer to supplier.

TB207.4.5 Sprinklers with 15mm shank threads and a k factor of 115 (no equivalent BS EN Clause)

Sprinklers with 15mm shank threads and a k factor of 115 shall only be used in refit applications, replacing 15mm sprinklers (k factor 80), in installations where the suitability of the water supplies, pipework and enlarged sprinkler head orifice has been proven by full hydraulic calculation.

Note: In some instances users may wish to take advantage of the enhanced performance of sprinklers with a k factor of 115 in existing installations. Sprinklers are available with a 15mm shank thread and k factor of 115, to enable users to refit installations with larger orifice sprinklers without altering the pipework.

TB207.4.6 Sprinkler thermal sensitivity (replaces BS EN Clause 14.5 and BS EN Table 38)

Sprinklers of different sensitivities shall be used in accordance with tables TB207.T3 and TB207.T4.

Table TB207.T3 Sprinkler sensitivity ratings	
Sprinkler pattern	**Sensitivity ratings**
Conventional Spray k160	Standard A or Special or Quick
Ceiling or flush Sidewall (upright or pendent)	Special or Quick
ESFR EPEC	Quick
Recessed Concealed Sidewall (horizontal)	Unrated(1)

Note 1: Recessed, horizontal sidewall and concealed heads are not designated a thermal sensitivity rating. The standard thermal sensitivity test is not appropriate due to at least one of the following reasons:

- the nature of the sprinkler assembly;
- orientation of the sprinkler frame when installed; or
- location of the temperature-sensitive element in relation to the roof or ceiling line.

The temperature-sensitive elements and their supporting components used in the construction of these sprinklers should operate in accordance with the special or quick response requirements, when tested in a conventional, spray or sidewall pattern sprinkler frame or suitable mounting assembly.

COMMENTARY AND RECOMMENDATIONS ON TB207.4.6

Response time index (RTI) is a measure of sprinkler thermal sensitivity and is expressed as

$$RTI = \tau\sqrt{\mu}$$

where τ is the time constant of the heat responsive element (measured in seconds) and μ is the gas velocity (measured in metres/second).

RTI has units of $(\text{metres.seconds})^{1/2}$.

Conduction factor (C) is a measure of conduction heat transfer from the sprinkler's heat-sensitive element to the sprinkler body and the fitting into which the sprinkler is installed. Conduction factor (C) has units of $(\text{metres/second})^{1/2}$.

RTI can be used in combination with conduction factor (C) to predict the time to operation of a sprinkler when subjected to fire conditions.

The limits for respective sprinkler thermal sensitivity ratings are as shown in Figure TB207.F1.

The thermal sensitivity testing method is considered unsuitable for rating the following sprinkler types and arrangements:

- recessed pattern;
- concealed pattern;
- sprinkler heads with protective coatings over the heat sensitive element.

These sprinkler types and arrangements of sprinkler are classified as unrated.

A marking scheme has not yet been introduced to identify sprinkler thermal sensitivity ratings. Ratings are identified in the product approval listings.

Table TB207.T4 Sprinkler thermal sensitivity selection					
Sensitivity rating[1]	In-rack protection	Ceiling protection above in-rack	Dry systems and Pre-action Type A	ESFR and EPEC	All other
Standard 'A'	No	Yes[2]	Yes	No	Yes
Special	No	Yes[2]	Yes	No	Yes[3]
Quick	Yes	Yes	No[4]	Yes	Yes[3]

Note 1: When new sprinklers are added to an existing sprinkler installation, it may be necessary to take into account the effect of different sensitivities in order to prevent excessive activations.
Note 2: Where in-rack sprinklers are omitted from the top of the rack and greater reliance is placed on the ceiling protection, ceiling or roof sprinklers with a 'quick' rating should be used.
Note 3: Special and quick response sprinklers should not be used to protect ceiling plenums where sprinkler protection is employed, see TB223.6.
Note 4: Quick response EPEC sprinklers may be used in accordance with TB222 providing all of the requirements of dry-pipe systems are met.

TB207.4.7 Selection of sprinkler heads for life safety sprinkler systems (see also BS EN Annex F)

Quick response sprinklers shall be used, except that standard 'A' and special response may be used in rooms no less than 500m² in area or no less than 5m in height.

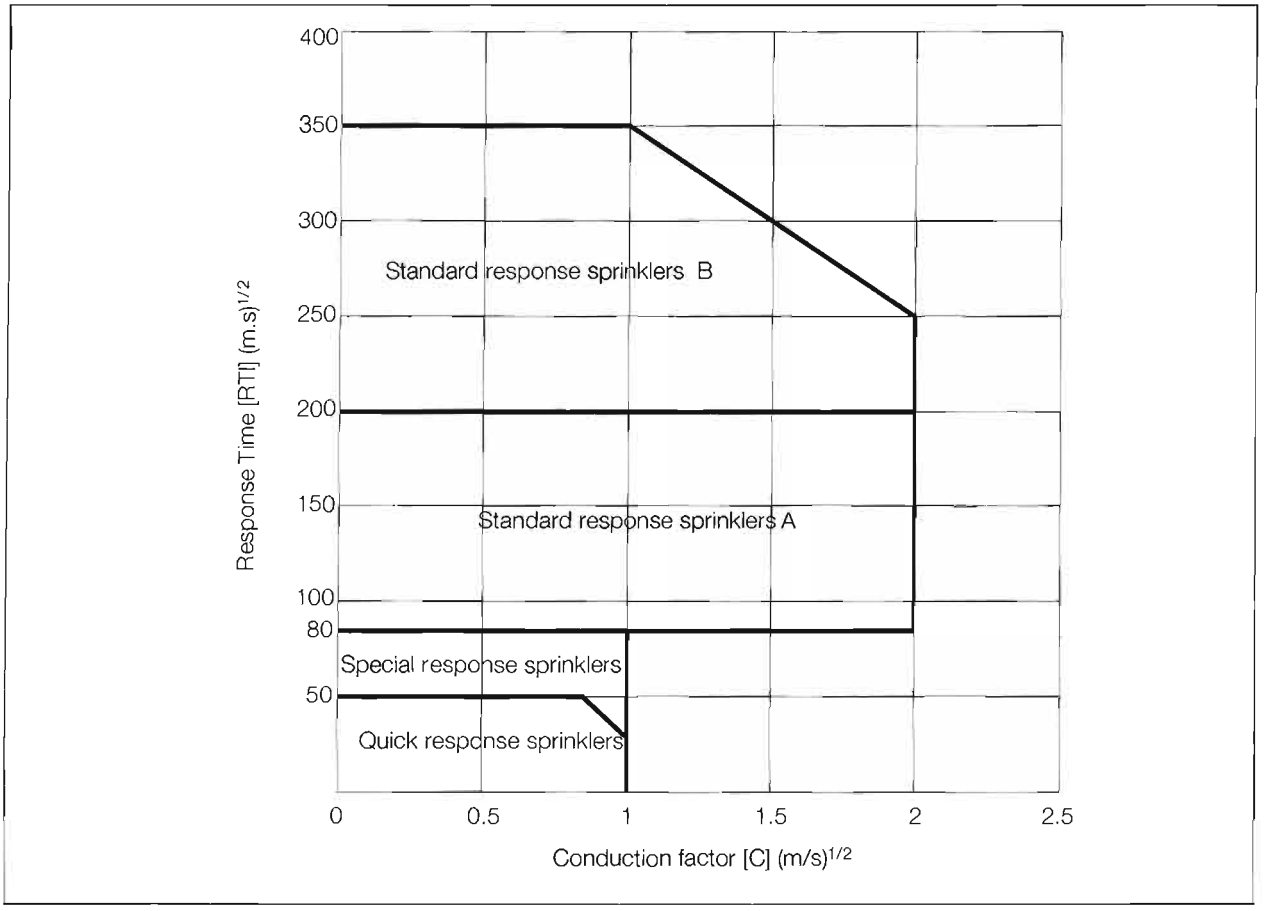

Note: See BS EN Annex F, 'Special requirements for life safety systems', for comprehensive life safety requirements.

Figure TB207.F1 Sprinkler thermal sensitivity ratings, Response Time Index (RTI) and conduction factor (C)

Supplementary requirements for sprinkler installations which can operate in the dry mode

Relates to BS EN Clauses 11.2, 11.3, 11.4 and 11.5

TB208.1 SCOPE

This Technical Bulletin gives supplementary requirements for design, performance, testing and maintenance of sprinkler installations which may operate in the dry pipe mode.

TB208.2 GENERAL

Unless otherwise stated, all the requirements, including notes of BS EN 12845 and Technical Bulletin TB203, continue to apply. Where appropriate, reference to the relevant BS EN clause is given.

Dry pipe installations are not considered suitable for protecting life safety risks or locations where rapidly developing fires may occur.

TB208.3 REQUIREMENTS FOR ALL DRY-PIPE SPRINKLER INSTALLATIONS INCLUDING PRE-ACTION SYSTEMS

TB208.3.1 Frost precautions

The installation control valve and the supply pipework shall be protected against freezing (see also BS EN 11.1.2).

> COMMENTARY AND RECOMMENDATIONS ON TB208.3.1
>
> The installation control valves should preferably be located in a room or cabinet and the location maintained at a temperature of not less than 4°C. See also RISCAuthority publication RC38: *Frost protection measures for sprinklers*.

TB208.3.2 Air supplies (see also BS EN Clause 11.2.1)

(a) Installations, in the dry-pipe mode, shall be charged with clean dry air to a predetermined pressure, in accordance with the recommendations of the manufacturer of the installation alarm valve, which shall not exceed 4 bar for any stand-by condition.

(b) The air-supply pipework shall be fitted with a:

- (i) pressure relief valve;
- (ii) non-return valve;
- (iii) stop valve (normally open);
- (iv) suitably sized restrictor; and
- (v) by-pass with stop valve (normally strapped and padlocked closed).

See Figure TB208.F1.

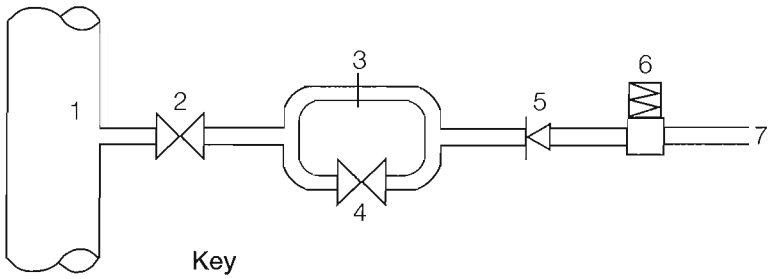

Key
1. Installation
2. Stop valve
3. Restricting orifice
4. Stop valve (normally closed)
5. Non-return valve
6. Pressure relief valve
7. Air supply

Figure TB208.F1 Dry system air supply connection

(c) Air supplies which are not appropriately regulated, such as a factory air line, shall additionally have:

- stop valve (normally open);
- pressure-reducing valve; and
- bleed outlet (normally open).

See Figure TB208.F2.

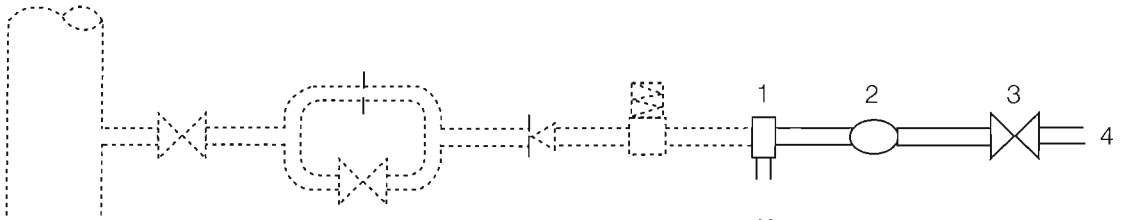

Key
1. Bleed outlet
2. Pressure reducing valve
3. Stop valve
4. Unregulated air supply

Figure TB208.F2 Dry system unregulated air supply connection

(d) The air supply pressure relief valve shall be set to relieve at a pressure of not more than 0,5 bar in excess of the air pressure requirement of the installation dry alarm valve.

(e) The air supply pipework shall be connected to the installation above the normal priming water level of the dry alarm valve.

(f) With the installation valve primed in the ready position, it shall be possible to pressurise the installation fully in one hour, at any time.

(g) Where recommended by the air compressor manufacturer, air compressors shall be equipped with automatic off-loading devices to depressurise the compressor prior to start up.

(h) Where a single air supply serves two or more installations, non-return valves or other means shall be provided to prevent air and water flow between installations.

COMMENTARY AND RECOMMENDATIONS ON TB208.3.2

Air supplies to sprinkler installations protecting a cold store should be dried by being passed through a suitable air dryer or by being taken from a freezer. If there is more than one freezer, the air supply should preferably be taken from the lowest temperature freezer.

Consideration should be given to the following when sizing the restrictor.

(a) The restrictor in the air supply pipework limits the mass flow of air from the air supply to the installation. High rates of air flow into the installation after operation of a sprinkler will prolong the time taken to trip the installation control valve and delay water discharge from the open sprinkler(s).

(b) Small-diameter restrictors may be prone to blockage if any foreign materials are present in the air or pipework upstream of the restrictor. Consideration should be given to provision of a filter upstream of the non-return valve and restrictor.

(c) Restrictors should be made from non-corrosive materials such as austenitic stainless steel or copper alloy. Restricitors with sharp-edged orifices have lower coefficients of discharge than restrictors having orifices with rounded edges.

TB208.3.3 Pipework configuration

Distribution and range pipes shall be of the terminal range configuration. Gridded and looped configurations of pipework are not allowed.

TB208.3.4 Remote test facility (relates to BS EN 15.5.2)

A test facility shall be provided, at the end of the hydraulically most remote range pipe on the installation, consisting of a 32mm nominal diameter pipe and quick-acting test valve, with an outlet nozzle equivalent in size to the smallest sprinkler in the installation.

The quick-acting test valve shall be located in an easily accessible position and shall be normally secured in the closed position with a suitable strap or chain. The end of the test line shall normally be capped or plugged.

COMMENTARY AND RECOMMENDATIONS ON TB208.3.4

Consideration shall be given to the provision of a permanent drain or means to dispose of waste water.

TB208.3.5 Commissioning test (additional to BS EN Clause 19)

The delay time, measured from opening the quick-acting test valve of the remote test facility, with the installation set in the dry mode, shall be determined and recorded whichever installation design criterion is used.

TB208.3.6 Block plan (additional to BS EN Clause 18.1)

The delay time (see TB208.4.1) of any installation which operates in the dry-pipe mode shall be shown on the block plan or on a permanent notice adjacent to the block plan and in any log book provided for the system.

TB208.4 REQUIREMENTS FOR ALTERNATE, DRY-PIPE, TAIL END ALTERNATE AND TAIL END DRY-PIPE SPRINKLER INSTALLATIONS

TB208.4.1 Sprinkler installation volume and performance (repeat of BS EN Clause 11.2.2)

The net volume of the pipework downstream of the control valves shall not exceed that shown in Table TB208.T1, unless a calculation and test shows that the maximum time between a sprinkler opening and water discharging is less than 60s. The test shall be carried out using the remote test valve specified in BS EN Clause 15.5.2 and TB208.3.4.

Table TB208.T1 Maximum size per installation – dry and alternate systems		
Installation type	Maximum volume of pipework m³	
Without accelerator or exhauster	1,5	–
With accelerator or exhauster	4,0	3,0

COMMENTARY AND RECOMMENDATIONS ON TB208.4.1

It is strongly recommended that dry and alternate systems should not be used for High Hazard, Storage (HHS) applications, since the delay in water reaching the first operating sprinklers could seriously impair the effectiveness of the system.

TB208.5 REQUIREMENTS FOR PRE-ACTION SYSTEMS

TB208.5.1 Size of installations

The number of sprinklers on a pre-action installation shall not exceed that shown in BS EN Table 17 (repeated below).

Table TB208.T2 Maximum number of sprinklers in wet pipe and pre-action systems (as in BS EN Table 17)	
Hazard class	Maximum protected area per control valve set m²
Low hazard (LH)	10 000
Ordinary hazard (OH), including any LH sprinklers	12 000 except as allowed in BS EN Annexes D 'Zoning of sprinkler installations' and F 'Special requirements for life safety systems'
High hazard (HH), including any OH and LH sprinklers	9 000

TB208.5.2 Performance

Pre-action installations shall discharge water from the remote test facility (specified in TB208.3.4) without undue delay. The time taken to discharge water shall be measured with the installation filled with water, as described in TB208.5.3.

TB208.5.3 Commissioning test (additional to BS EN Clause 19)

With the pre-action installation in the normal stand-by condition, trip the pre-action alarm valve and allow the installation to fill with water. When a state of equilibrium has been reached, determined by pressure stabilisation in the installation, open the quick-acting test valve of the remote test facility and measure the time taken to discharge water.

TB208.5.4 Alarms and operation of pre-action valves (replaces BS EN Clause 16.2.3)

Each installation shall be provided with a low gas/air pressure alarm, to provide a visual and audible warning in accordance with BS EN Annex I.

The fire detection system shall automatically give an alarm at the fire alarm control panel, pre-action system control panel and any repeater panels and shall operate two independent (appropriately certificated) solenoid valves or actuator mechanisms, either of which shall release (Type A or Type B) pre-action alarm valves. The solenoid valves or actuator mechanisms may be energised or de-energised to operate a pneumatic pre-action valve control system.

Note: BS EN Clauses 11.4.1.1 and 11.4.1.2. specify Type A and Type B pre-action systems as follows:

- **Type A:** which is an otherwise normal dry pipe installation in which the control valve set is activated by an automatic fire detection system, using smoke detection or an equivalently sensitive detector, but not by the operation of the sprinklers.

  Type A pre-action installations should only be installed in areas where considerable damage could occur if there were an accidental discharge of water; and

- **Type B:** which is an otherwise normal dry pipe installation in which the control valve set is activated either by an automatic fire detection system or by the operation of the sprinklers. Independently of the response of the detectors, a pressure drop in the pipework causes the opening of the alarm valve.

  Type B pre-action installations may only be installed wherever a dry pipe system is called for and the spread of fire is expected to be rapid. They may also be used instead of ordinary dry pipe systems with or without an accelerator or exhauster.

TB208.5.5 Pre-action system control panel

The pre-action system control panel shall comply with the appropriate requirements of BS 5839-4 or EN 54-2 and -4 and the following:

(a) **Electrical power supplies.** The pre-action control panel, solenoid valves or actuator mechanisms shall be powered from a continuous and reliable source of electricity such as the public supply. A secondary stand-by power supply shall be immediately available in the event of failure of the mains supply; it shall consist of an independent battery continuously connected to an independent fully automatic charger deriving power from the public supply.

(b) **Size and independence of power supplies.** The main and stand-by power supplies shall each be capable of supplying the maximum load for the pre-action control panel, solenoid valves or actuator mechanisms, as specified by the manufacturer(s) under normal, fault and fire conditions, irrespective of the state of the other power supply.

(c) **Duration of stand-by power supply.** The duration of the stand-by power supply, without any public supply and with a normal load while in the ready condition, shall be at least 72 hours. After the 72-hour stand-by period (without any public supply) the stand-by power supply shall be capable of operating the pre-action control panel and solenoid valve or actuator to release the pre-action alarm valve.

(d) **Control panel response to fire alarm failure.** The pre-action control panel shall initiate operation of the pre-action alarm valve immediately in the event of a fire alarm system fault (including a failure of the primary and stand-by power supplies) which results in failure to execute the appropriate actions in the event of fire.

TB208.5.6 Wiring of solenoid valves and actuators

The pre-action control panel relays and circuitry operating the pre-action alarm valve solenoid valves or actuator mechanisms shall be duplicated and wired such that no single fault or failure shall render the installation inoperable.

> COMMENTARY AND RECOMMENDATIONS ON TB208.5.6
>
> It is essential that each of the solenoid valves or actuator mechanisms is independently connected to the control panel to comply with these requirements.

TB208.5.7 Monitoring

Monitoring devices shall be provided to give:

(a) indication that any stop valves downstream of the installation control valve set are fully open;

(b) audible and visual warnings at the pre-action control panel that any monitored stop valve (specified in TB208.5.7(a)) is not fully open;

(c) audible and visual warnings at the pre-action control panel that the cover to a condition indicator switch has been removed;

(d) audible and visual warnings at the pre-action control panel of short circuit or disconnection of the leads of any solenoid valve or actuator which is energised to open;

(e) audible and visual warnings at the pre-action control panel of short circuit or disconnection of the primary power supply, the secondary power supply or any battery charger associated with the operation of the pre-action system.

COMMENTARY AND RECOMMENDATIONS ON TB208.5.7

The fault indications should also be communicated to any system provided for the transmission of alarms to a remote manned centre.

TB208.5.8 Fire detection

The fire detection system used to activate a pre-action sprinkler system shall comply with appropriate parts of BS 5839-1, BS 6266 and RC3: *Loss prevention in electronic equipment installations* (or its equivalent, where appropriate) and the following:

(a) **Provision of detection means.** Each room or compartment protected by sprinklers shall have sufficient fire detectors to initiate release of the pre-action installation without the operation of any detectors external to the room or compartment or located within equipment.

(b) **Coincidence connection.** Fire detection systems employing coincidence connection (requiring a response from two detectors to initiate operation of the pre-action alarm valve) may be used with Type A and Type B pre-action installations. Consideration shall be given to actuation of the pre-action alarm valve on operation of a single fire detector where fast-developing fires may occur.

(c) **Coincidence connection wiring.** Any two detectors of a group of detectors which may initiate the operation of the pre-action alarm valve shall be separately connected to independent wiring circuits.

(d) **Spacing of detectors.** Consideration shall be given to the nature of the occupancy, building height, sprinkler thermal sensitivity, air movement and the recommendations of BS 5839-1, Clause 12 or BS 6266, when determining the spacing of fire detectors.

COMMENTARY AND RECOMMENDATIONS ON TB208.5.8

Detectors provided to detect fire or overheating in voids, cabinets or equipment should not be included when determining the number of fire detectors required in a room or compartment.

Heat detectors should not normally be considered for use in pre-action installations.

The recommendations of BS 5839 and BS 6266 are not explicit with respect to detector coverage or spacing. Consideration should be given to the following:

(a) **Pre-action systems requiring response from one detector to initiate operation of a pre-action alarm valve**

The maximum area of coverage (C_a) per fire detector is determined by the formula:

$$C_a = \frac{a}{u}$$

where:

a is the maximum area of coverage per detector in still air conditions (in m^2) (see Table TB208.T3)

u is the air velocity factor (see Table TB208.T4).

The maximum horizontal distance (d, in metres), from any point in the room or compartment to a detector is determined by the formula:

$$d \leq \sqrt{\frac{C_a}{2}}$$

The minimum number of fire detectors (N) required to protect a room or compartment is determined by the formula:

$$N = \frac{A}{C_a} + X$$

where:

A is the plan area of the room or compartment under consideration (in m^2)

X is the number of any additional detectors required to achieve the recommended value of d at all points within the protected area

(b) **Pre-action systems requiring response from two coincidence detectors to initiate operation of a pre-action alarm valve**

The maximum area of coverage (R_a) per coincidence fire detector is determined by the formula:

$$R_a = \frac{r}{u}$$

where:

r is the maximum area of coverage per coincidence fire detector in still air conditions for the appropriate hazard category (in m^2) (see Table TB208.T3)

The maximum horizontal distance (s) (in metres) from any point in the room or compartment to two coincidence detectors is determined by the formula:

$$s = \sqrt{R_a}$$

The minimum number of coincidence fire detectors required to protect the room or compartment is determined by the formula:

$$N = \frac{A}{R_a} + X_C$$

where:

X_c is the number of any additional detectors required to achieve the recommended value of s at all points within the protected area.

Table TB208.T3 Maximum areas of coverage per detector to operate pre-action sprinkler installations in still air conditions for coincidence and non-coincidence fire detection systems

Number of detectors required to respond to operate pre-action system	One (non-coincidence detection)	Two (coincidence detection)
Hazard	Maximum area of coverage per detector (a)	Maximum area of coverage per detector (r)
	m^2	m^2
LH	100	50
OH1, OH2 & OH3	100	50
OH3 Storage & OH4	50	25
HHP & HHS	50	25

Note: Occupancies where a fast response is essential or those having electronic data processing (EDP) installations may require areas of coverage per detector smaller than those stated in the table. Appropriate values for electronic data processing (EDP) installations are stated in RISCAuthority publication RC3 and in BS 6266.

Table TB208.T4 Air velocity factor (*u*)			
Normal air velocity m/s	<1[1]	1 to 4[2]	>4[2]
u	1	2	3

Note 1: The air velocities within Ordinary Hazard Group 3 storage and special, and all High Hazard occupancies should preferably be below 1m/s under normal operating conditions. Higher air velocities may impair the performance of the protection.
Note 2: Provision should be made for closing down ventilation systems or equipment causing air movement when smoke or fire is detected. This is particularly important where forced air flows may deflect the hot gas plume away from fire detectors and sprinklers in the immediate fire area.

TB208.5.9 Maintenance

Maintenance of pre-action installations shall be carried out in accordance with the requirements and recommendations of TB203: *Care and maintenance of automatic sprinkler systems*. In addition, the following tests and maintenance shall be carried out on pre-action installations:

(a) **Checks by patrols.** Check control panel for correct stand-by condition of control panel.

(b) **Regular inspections and tests by fire safety manager or responsible person.** Check pressure gauges for correct pressure.

(c) **Maintenance by sprinkler installing engineers.**

(i) Six monthly – Pre-action installations Types A and B: check for correct function of the fire detection system, pre-action control panel and pre-action alarm valve by activating a detector or detector pair simultaneously.

(ii) Annually – Pre-action installations Type B: check for correct function of the pre-action alarm valve by opening the quick-acting test valve.

TB208.6 PUBLICATIONS REFERRED TO

- BS 5839-1: *Fire detection and alarm systems for buildings. Code of practice for system design, installation commissioning and maintenance.*
- BS 5839-4: *Fire detection and alarm systems for buildings. Specification for control and indicating equipment.*
- BS 6266: *Code of practice for fire protection for electronic data processing installations.*
- RC3: *Loss prevention in electronic equipment installations* (RISCAuthority publication).
- BS EN 54-2: *Fire detection and alarm systems. Control and indicating equipment.*
- BS EN 54-4: *Fire detection and alarm systems. Power supply equipment.*
- RC38: *Frost protection measures for sprinklers* (RISCAuthority publication).

ESFR sprinkler protection

Relates to BS EN Annex L

TB209.1 INTRODUCTION

Early Suppression Fast Response (ESFR) sprinklers are quick acting high performance sprinklers which have the capability of suppressing fires within storage risks. There is little room for error in the design and installation of ESFR sprinkler systems; the design principles and the operating characteristics are significantly different from standard sprinkler protection. ESFR sprinklers may be unable to cope with adverse design features and non-compliances, which may be common practice when installing standard sprinkler protection. It is therefore essential that all the requirements of this Technical Bulletin are complied with, without exception, when applying ESFR protection.

TB209.2 SCOPE

This Technical Bulletin specifies requirements and recommendations for the design and installation of ESFR sprinkler systems in buildings. It covers occupancies, storage arrangements, installation design, building requirements and the management of protected buildings which is essential to ensure satisfactory performance of ESFR sprinkler systems.

TB209.3 DEFINITIONS

TB209.3.1 Sprinkler, ESFR (Early Suppression Fast Response) pattern

A thermosensitive device designed to react at a predetermined temperature by automatically releasing a stream of water and distributing it in a specified pattern and density over a designated area to provide early suppression of a fire when installed on the appropriate sprinkler piping with a suitable water supply.

TB209.3.2 Assumed Maximum Number of Sprinklers Operating (AMNOSO)

The maximum number of ESFR sprinklers which it is assumed will operate in a fire, plus any additional sprinklers in the area.

TB209.4 GENERAL

The requirements of the *LPC Rules for automatic sprinkler installations incorporating BS EN 12845* which are not applicable for the design, installation and upkeep of ESFR sprinkler protection are identified in Appendix A of this Technical Bulletin.

TB209.5 CONTRACT ARRANGEMENTS

The information provided at the preliminary or estimating stage shall include an assessment to establish ability to comply with critical requirements. The written assessment shall include a review of intended actions to comply with, at least, the following clauses:

TB209.7, TB209.8, TB209.9.1, TB209.10.1, TB209.10.2, TB209.10.11, TB209.10.13, TB209.10.16 and TB209.12.4

Any known non-compliance with other requirements shall also be declared.

COMMENTARY AND RECOMMENDATIONS ON TB209.5

Identified potential non-compliances may be sufficient reason not to apply ESFR protection.

TB209.6 MANAGEMENT SYSTEMS

TB209.6.1 ESFR sprinkler protection shall only be used in buildings where the property, storage systems and contents are controlled by appropriate management systems. The management system documentation shall include procedures for at least the following:

(a) risk assessment controls for incoming goods;

(b) routine checking and inspection procedures;

(c) sprinkler system maintenance contract with a company LPCB certificated to LPS 1048 or certificated under an equivalent scheme;

(d) maintenance of an outline specification for the building and fire protection with a record of any changes which may influence the performance of the sprinkler system;

(e) regular review of methods of storage;

(f) regular review of hazard;

(g) regular review of compliance with ESFR installation requirements;

(h) dealing with non-compliances.

COMMENTARY AND RECOMMENDATIONS ON TB209.6.1

The critical review of the hazard and storage methods specified in (a), (b), (d), (e), (f) and (g) above should, at least, be in accordance with TB203: *Care and maintenance of automatic sprinkler systems*.

Regular review of hazard should include checking that aisles and flues in storages comply with respective requirements.

The written procedures should encompass actions to be taken if major non-compliances occur and should include informing authorities having jurisdiction such as fire authorities and leading insurers.

TB209.7 OCCUPANCIES AND FIRE HAZARDS

TB209.7.1 ESFR sprinklers may be used to protect storages in accordance with Tables TB209.T2 to T13. Table TB209.T1 provides a reference guide to Tables TB209.T2 to T12.

ESFR sprinkler may be used to protect Ordinary Hazard (OH) and High Hazard (HH) process areas adjacent to ESFR protected storages.

TB209.7.2 ESFR sprinklers shall not be used to protect areas where one of the following may be present:

(a) materials in which fires cannot be readily controlled by sprinklers (eg acrylic fibre yarn); or

(b) commodities or storage configurations which may give rise to unusual fire characteristics (eg lightweight paper, such as rolls of tissue); or

(c) open top containers (eg plastic storage boxes, such as tote boxes with solid bottoms); or

(d) commodities which have not been assessed or tested for protection by ESFR sprinkler protection;

(e) automatic smoke venting.

COMMENTARY AND RECOMMENDATIONS ON TB209.7.2

ESFR sprinkler protection may be used in conjunction with manually operated smoke ventilation systems, suitable only for smoke ventilation purposes, operated by the fire brigade.

TB209.8 RACKED, SHELVED AND POST PALLET STORAGE

TB209.8.1 Longitudinal and transverse flues

Storages shall have longitudinal and transverse flues, which are:

(a) continuous for the full height of each block of storage;

(b) vertically aligned;

(c) free of stored goods;

(d) regularly spaced and having dimensions as follows:

(i) transverse flues shall be at least 0,075m wide and shall be spaced at distances of not more than 3,0m (see Figure TB209.F1); and

(ii) longitudinal flues shall be at least 0,15m wide and shall be spaced at distances of not more than 3,0m.

Table TB209.T1 Guide to ESFR sprinkler use

	Storage method			
	ST1	ST3	ST4	ST5
Commodity	Technical Bulletin and TB209 table reference			
Aerosols	TB216.5.3	TB216.5.3	TB216.5.3	TB216.5.3
Categories I, II and III	TB209.T2	TB209.T3	TB209.T3	TB209.T2[1] TB209.T3
Rubber tyres	–	TB209.11	TB209.11	–
Expanded polyurethane in cardboard boxes	TB209.T2	TB209.T3	TB209.T3	TB209.T2[1] TB209.T3
Unexpanded plastic in cardboard boxes	TB209.T2	TB209.T3	TB209.T3	TB209.T2[1] TB209.T3
Exposed unexpanded plastic	TB209.T4	–	TB209.T4	TB209.T4
Expanded plastic in cardboard boxes	TB209.T5	–	TB209.T6	TB209.T5[1]
Exposed expanded plastic	TB209.T7	–	–	TB209.T7[1]
Paper rolls stored on end:				
Medium weight	TB209.T8	–	–	–
Heavy weight	TB209.T9	–	–	–
Heavy weight plastic coated	TB209.T10	–	–	–
Commodities stored in mezzanines	TB209.T12	TB209.T13	TB209.T13	–

Note 1: ST5 Shelving and bin box storage.

TB209.8.2 Shelving

Single and double row shelved racks shall comply with one of the following:

(a) slatted shelves shall have shelf open areas, uniformly interspaced, of at least 50% of the shelf plan area. The distance between openings shall not exceed 0,15m; or

(b) grated or mesh type shelves shall have uniform openings of at least 50% of the shelf plan area. The horizontal distance between openings shall not exceed 0,15m.

Table TB209.T2
Storage applications:
ST1 Free standing or block storage
ST5 Shelving and bin box storage

Commodities:
Categories I, II, III[1]
Unexpanded plastic in cardboard boxes
Expanded polyurethane in cardboard boxes[4]

Maximum storage height (m)	Maximum ceiling height[2] (m)				
	9,1	9,7	10,6	12,2	13,7
	Sprinkler minimum operating pressure[3] bar				
	ESFR pendent sprinkler nominal k factor 200				
7,6	3,5	4,1	5,2	5,2	6,2
9,1	†	†	5,2	5,2	6,2
10,6	†	†	†	5,2	6,2
	ESFR pendent sprinkler nominal k factor 242[5]				
7,6	2,4	2,9	3,6	3,6	4,3
9,1	†	†	3,6	3,6	4,3
10,6	†	†	†	3,6	4,3
	ESFR pendent sprinkler nominal k factor 320[5]				
7,6	1,7	2,1	2,4	3,1	3,5
9,1	†	†	2,4	3,1	3,5
10,6	†	†	†	3,1	3,5
12,2	†	†	†	†	3,5
	ESFR pendent sprinkler nominal k factor 360[5]				
7,6	1,4	1,7	2,1	2,7	3,5
9,1	†	†	2,1	2,7	3,5
10,6	†	†	†	2,7	3,5
12,2	†	†	†	†	3,5

† Not applicable.
Note 1: Excluding rolled paper and plastic.
Note 2: The ceiling height shall be taken as the maximum vertical distance measured from the floor to the underside of the ceiling.
Note 3: Minimum operating pressure for ESFR sprinklers for the given AMNOSO.
Note 4: Applies to k200 ESFR sprinkler protection only. Consult suppliers of k242, k320 and k360 ESFR sprinklers before using to protect expanded polyurethane in cardboard boxes.
Note 5: Excluding expanded polyurethane in cardboard boxes, see Note 4.

Table TB209.T3
Storage applications:
ST3 Post pallets with open bottoms
ST4 Palletised racking
ST5 Slatted open shelving

Commodities:
Categories I, II, III[1]
Unexpanded plastic in cardboard boxes
Expanded polyurethane in cardboard boxes[6]

Maximum storage height (m)	Maximum ceiling height[2] (m)				
	9,1	9,7	10,7	12,2	13,7
	Sprinkler minimum operating pressure[3] bar				
	ESFR pendent sprinkler nominal k factor 200				
7,6	3,5	4,1	5,2	5,2	6,2[4, 5]
9,1	†	†	5,2	5,2	6,2[4, 5]
10,6	†	†	†	5,2	6,2[4, 5]
12,2	†	†	†	†	6,2[4, 5]
	ESFR pendent sprinkler nominal k factor 242[7]				
7,6	2,4	2,9	3,6	3,6	4,3[4, 5]
9,1	†	†	3,6	3,6	4,3[4, 5]
10,6	†	†	†	3,6	4,3[4, 5]
12,2	†	†	†	†	4,3[4, 5]
	ESFR pendent sprinkler nominal k factor 320[7]				
7,6	1,7	2,1	2,4	3,1	3,5
9,1	†	†	2,4	3,1	3,5
10,6	†	†	†	3,1	3,5
12,2	†	†	†	†	3,5
	ESFR pendent sprinkler nominal k factor 360[7]				
7,6	1,4	1,7	2,1	2,7	3,5
9,1	†	†	2,1	2,7	3,5
10,6	†	†	†	2,7	3,5
12,2	†	†	†	†	3,5

† Not applicable.
Note 1: Excluding rolled paper and plastic.
Note 2: The ceiling height shall be taken as the maximum vertical distance measured from the floor to the underside of the ceiling.
Note 3: Minimum operating pressure for ESFR sprinklers for the given AMNOSO.
Note 4: Not suitable for ST3 storage.
Note 5: Plus one level of in-rack sprinklers.
Note 6: Applies to k200 ESFR sprinkler protection only. Consult suppliers of k242, k320 and k360 ESFR sprinklers before using to protect expanded polyurethane in cardboard boxes.
Note 7: Excluding expanded polyurethane in cardboard boxes, see Note 6.

Table TB209.T4
Storage applications:
ST1 Free standing or block storage
ST4 Palletised racking
ST5 Slatted open shelving

Commodities:
Exposed unexpanded plastics[1]

Maximum storage height (m)	Maximum ceiling height[2] (m)				
	9,1	9,7	10,7	12,2	13,7
	Sprinkler minimum operating pressure[3] bar				
	ESFR pendent sprinkler nominal k factor 200				
7,6	3,5	4,1	5,2	5,2	6,2
9,1	†	†	5,2	5,2	6,2
10,6	†	†	†	5,2	6,2
	ESFR pendent sprinkler nominal k factor 242				
7,6	2,4	2,9	3,6	3,6	4,3
9,1	†	†	3,6	3,6	4,3
10,6	†	†	†	3,6	4,3
	ESFR pendent sprinkler nominal k factor 320				
7,6	2,4	2,9	3,5	3,5	†
9,1	†	†	3,5	3,5	†
10,6	†	†	†	3,5	†
	ESFR pendent sprinkler nominal k factor 360				
7,6	2,4	2,9	3,5	3,5	†
9,1	†	†	3,5	3,5	†
10,6	†	†	†	3,5	†

† Not applicable.
Note 1: Excluding open top containers.
Note 2: The ceiling height shall be taken as the maximum vertical distance measured from the floor to the underside of the ceiling.
Note 3: Minimum operating pressure for ESFR sprinklers for the given AMNOSO.

Table TB209.T5
Storage applications:
ST1 Free standing or block storage – palletised[1]
ST5 Shelving and bin box storage

Commodities:
Expanded plastic in cardboard boxes

Maximum storage height (m)	Maximum ceiling height[2] (m)				
	9,1	9,7	10,7	12,2	13,7
	Sprinkler minimum operating pressure[3] bar				
	ESFR pendent sprinkler nominal k factor 200				
7,6	3,5	4,2	†	†	†
	ESFR pendent sprinkler nominal k factor 242				
7,6	2,4	2,9	†	†	†
	ESFR pendent sprinkler nominal k factor 360				
7,6	4,1	4,1	4,1	4,1	†

† Not applicable.
Note 1: Plastics in cardboard boxes classified as a Category IV commodity.
Note 2: The ceiling height shall be taken as the maximum vertical distance measured from the floor to the underside of the ceiling.
Note 3: Minimum operating pressure for ESFR sprinklers for the given AMNOSO.

Table TB209.T6 **Storage applications:** ST4 Palletised racking		
Commodities: Expanded plastic in cardboard boxes[1]		
Maximum storage height (m)	**Maximum ceiling height[2] (m)**	
	9,1	**9,7**
	Sprinkler minimum operating pressure[3] bar	
	ESFR pendent sprinkler nominal k factor 200	
7,6	3,5	4,2
	ESFR pendent sprinkler nominal k factor 242	
7,6	2,4	2,9
	ESFR pendent sprinkler nominal k factor 320	
7,6	2,4	2,9
	ESFR pendent sprinkler nominal k factor 360	
7,6	2,4	2,9

Note 1: Plastics in cardboard boxes classified as a Category IV commodity.
Note 2: The ceiling height shall be taken as the maximum vertical distance measured from the floor to the underside of the ceiling.
Note 3: Minimum operating pressure for ESFR sprinklers for the given AMNOSO.

Table TB209.T7 **Storage applications:** ST1 Free standing or block storage – palletised[1] ST5 Shelving and bin box storage				
Commodities: Exposed expanded plastics				
Maximum storage height (m)	**Maximum ceiling height[2] (m)**			
	7,6	**9,1**	**10,7**	**12,2**
	Sprinkler minimum operating pressure[3] bar			
	ESFR pendent sprinkler nominal k factor 200			
6,1	5,2	6,9	†	†
7,5	†	6,9	†	†
	ESFR pendent sprinkler nominal k factor 360			
6,1	4,1[1]	4,1[1]	4,1[1]	4,1[1]
7,5	†	4,1[1]	4,1[1]	4,1[1]

† Not applicable.
Note 1: Free standing palletised storage shall be in a tightly constructed block with minimal gaps between pallet stacks.
Note 2: The ceiling height shall be taken as the maximum vertical distance measured from the floor to the underside of the ceiling.
Note 3: Minimum operating pressure for ESFR sprinklers for the given AMNOSO.

Table TB209.T8 **Storage applications:** ST1 Free standing or block storage			
Commodities: Paper rolls stored on end – Medium weight paper[1, 2, 3, 4]			
Maximum storage height (m)	**Maximum ceiling height[5] (m)**		
	9,1	**10,7**	**12,2**
	Sprinkler minimum operating pressure[6] bar		
	ESFR pendent sprinkler nominal k factor 200		
6,1	6,1	6,1	6,1
	ESFR pendent sprinkler nominal k factor 242		
6,1	3,4	5,2	5,2
	ESFR pendent sprinkler nominal k factor 320		
6,1	1,7	†	†
	ESFR pendent sprinkler nominal k factor 360		
6,1	1,4	2,1	2,7

† Not applicable.
Note 1: Medium weight paper – non absorbent paper or board with a hard or smooth surface weighing more than 49g/m² and less than 98g/m².
Note 2: Protection not suitable for light weight paper weighing less than 49g/m², such as toilet paper or paper towelling.
Note 3: Suitable for paper rolls with or without steel bands or steel wires to prevent the paper from unrolling.
Note 4: Not suitable for protecting paper roll storages where the roll stacks are separated in both directions by 100mm or more.
Note 5: The ceiling height shall be taken as the maximum vertical distance measured from the floor to the underside of the ceiling.
Note 6: Minimum operating pressure for ESFR sprinklers for the given AMNOSO.

Table TB209.T9 **Storage applications:** ST1 Free standing or block storage			
Commodities: Paper rolls stored on end – Heavy weight paper[1, 2]			
Maximum storage height (m)	**Maximum ceiling height[3] (m)**		
	9,1	**10,7**	**12,2**
	Sprinkler minimum operating pressure[4] bar		
	ESFR pendent sprinkler nominal k factor 200		
7,6	3,4	5,2	5,2
9,1	†	5,2	5,2
	ESFR pendent sprinkler nominal k factor 242		
7,6	2,4	3,6	3,6
9,1	†	3,6	3,6

† Not applicable.
Note 1: Heavy weight paper – non absorbent paper or board weighing 98g/m² or more.
Note 2: Where the paper roll stacks are separated in both directions by 100mm or more, the paper rolls shall have steel bands or steel wires to prevent the paper from unrolling, otherwise protection suitable for paper rolls with or without steel bands or steel wires.
Note 3: The ceiling height shall be taken as the maximum vertical distance measured from the floor to the underside of the ceiling.
Note 4: Minimum operating pressure for ESFR sprinklers for the given AMNOSO.

Table TB209.T10
Storage applications:
ST1 Free standing or block storage

Commodities:
Paper rolls stored on end – Plastic coated heavy weight paper[1, 2]

Maximum storage height (m)	Maximum ceiling height[3] (m)		
	9,1	10,7	12,2
	Sprinkler minimum operating pressure[4] bar		
	ESFR pendent sprinkler nominal k factor 200		
6,1	3,4	5,2	5,2
	ESFR pendent sprinkler nominal k factor 242		
6,1	2,4	3,6	3,6

Note 1: Heavy weight paper – non absorbent paper or board weighing 98g/m² or more.
Note 2: Where the paper roll stacks are separated in both directions by 100mm or more the paper rolls shall have steel bands or steel wires to prevent the paper from unrolling, otherwise protection suitable for paper rolls with or without steel bands or steel wires.
Note 3: The ceiling height shall be taken as the maximum vertical distance measured from the floor to the underside of the ceiling.
Note 4: Minimum operating pressure for ESFR sprinklers for the given AMNOSO.

Table TB209.T11
Storage applications:
ST3 Post pallets in multiple rows[1, 2]
ST4 Palletised racking[1, 2]

Commodities:
Rubber tyres

Maximum storage height (m)	Maximum ceiling height[3] (m)
	9,1
	Sprinkler minimum operating pressure[4] bar
	ESFR pendent sprinkler nominal k factor 200
7,6	3,5
	ESFR pendent sprinkler nominal k factor 242
7,6	2,4
	ESFR pendent sprinkler nominal k factor 320
7,6	1,7
	ESFR pendent sprinkler nominal k factor 360
7,6	1,4

Note 1: Open bottomed storage systems only.
Note 2: Tyres may be stored on side or on tread.
Note 3: The ceiling height shall be taken as the maximum vertical distance measured from the floor to the underside of the ceiling.
Note 4: Minimum operating pressure for ESFR sprinklers for the given AMNOSO.

Table TB209.T12 **Storage applications:** Mezzanines with: ST1 Free standing or block stacking	
Commodities: All goods identified in Table TB209.T2, T6, T7, T8 and T9	
Maximum storage height (m)	**Maximum ceiling height[1] (m)**
	≤ 4,5
	Sprinkler minimum operating pressure[2] bar
	ESFR pendent sprinkler nominal k factor 200
[3]	3,5
Note 1: The ceiling height shall be taken as the maximum vertical distance measured from the floor to the underside of the ceiling. **Note 2:** Minimum operating pressure for ESFR sprinklers for the given AMNOSO. **Note 3:** Maximum storage height not greater than roof or ceiling height minus 1m.	

Table TB209.T13 **Storage applications:** Mezzanines with: ST3 Post pallets in multiple rows[1] ST4 Palletised racking	
Commodities: All goods identified in Table TB209.T2, T6, T7, T8 and T9	
Maximum storage height (m)	**Maximum ceiling height[1] (m)**
	≤ 4,5
	Sprinkler minimum operating pressure[2] bar
	ESFR pendent sprinkler nominal k factor 200
[3]	3,7
	ESFR pendent sprinkler nominal k factor 242
[3]	2,4
Note 1: The ceiling height shall be taken as the maximum vertical distance measured from the floor to the underside of the ceiling. **Note 2:** Minimum operating pressure for ESFR sprinklers for the given AMNOSO. **Note 3:** Maximum storage height not greater than roof or ceiling height minus one metre.	

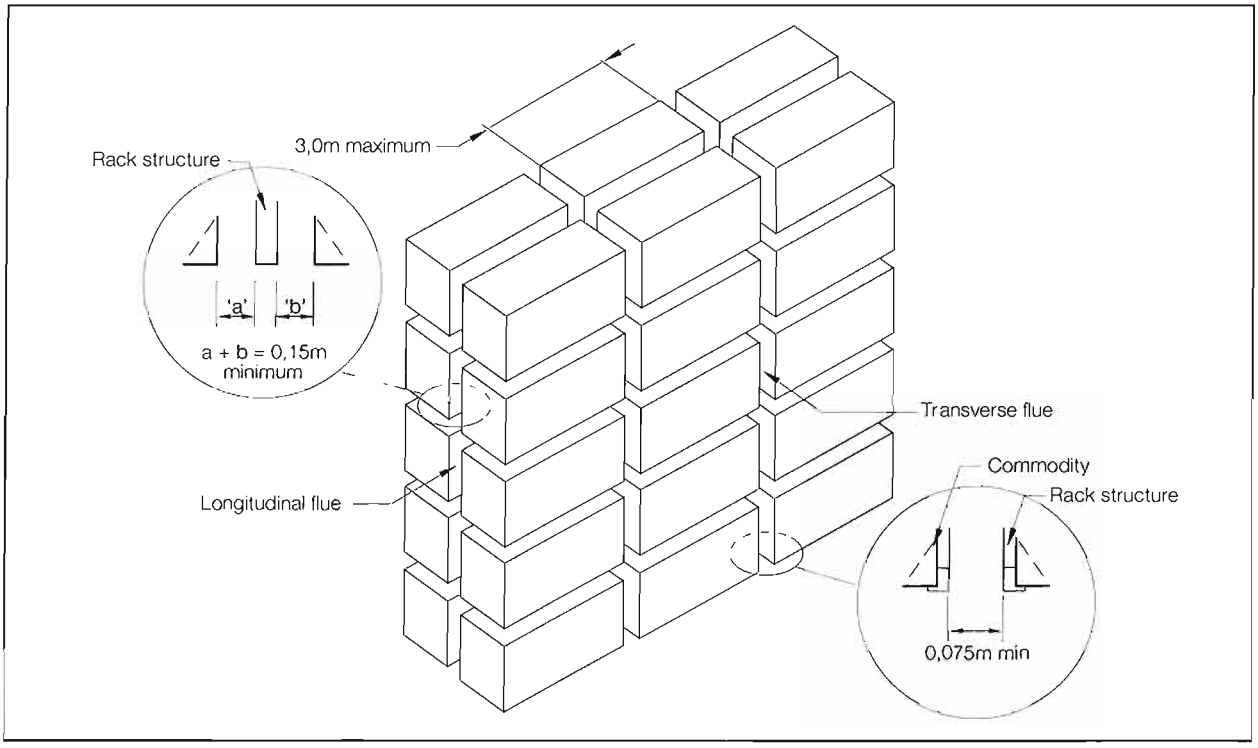

Figure TB209.F1 Racked, shelved and post pallet storage flue spacings and dimensions

TB209.9 BUILDING REQUIREMENTS

TB209.9.1 Roof or ceiling slope

The roof or ceiling slope shall not exceed 9½° (170mm/m).

TB209.9.2 Measures required to correct excessive roof or ceiling slope

Where roof or ceiling slopes exceed 9½°, the roof of or ceiling shall be under-drawn with a false ceiling. The false ceiling shall be of non-combustible construction, having an acceptable slope. ESFR sprinklers shall be deployed below the false ceiling. Standard sprinkler protection shall be employed in the roof or ceiling space in accordance with BS EN 5.4.

COMMENTARY AND RECOMMENDATIONS ON TB209.9.2

Ceiling slope influences the movement of hot gases across the ceiling and therefore influences the operation of sprinkler heads during a fire. Excessive ceiling slope may result in the operation of sprinklers remote from the fire whilst delaying the operation of sprinklers in close proximity to the fire.

TB209.9.3 Ceiling strength

Ceilings and any sub-ceilings shall be firmly secured and shall be capable of withstanding a vertical upward thrust of 50N/m^2.

COMMENTARY AND RECOMMENDATIONS ON TB209.9.3

Ceiling materials considered suitable are 10mm gypsum board, corrugated and sheet steel and mineral tiles.

TB209.9.4 Roof lights

Roof lights shall be flush to the ceiling or underdrawn at the ceiling level. Roof lights shall be capable of withstanding a temperature of 300°C for a period of at least 5 minutes.

TB209.9.5 Powered ventilation

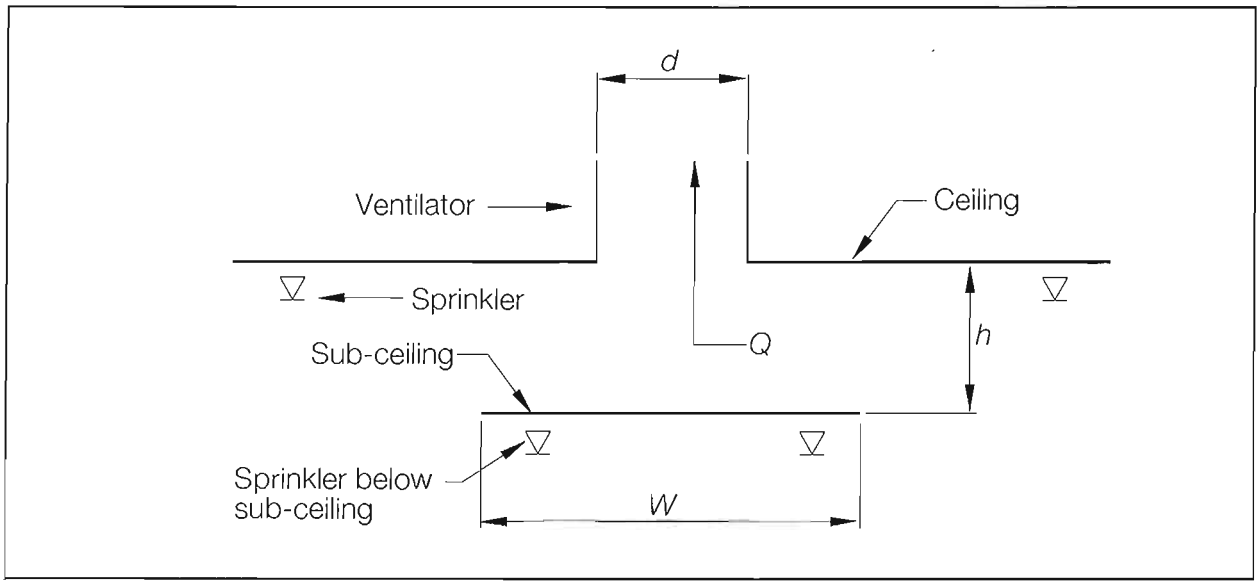

Figure TB209.F2 Sprinklered sub-ceiling below a ventilator

At least one of the following measures shall be to mitigate the effects of air movement on ESFR sprinklers in the event of fire:

(a) where powered ventilation is employed, the buildings shall be protected by LPCB (or equivalently) approved fire alarm installations. The powered ventilation shall be stopped and any dampers closed automatically in response to the fire detection system alarm of fire; or

(b) the horizontal distance between stored goods and the perimeter of the extraction ventilator openings shall be not less than L (in m) given by the equation:

$L = \frac{1}{2}S + d$

where

S is the sprinkler spacing (in m);

d is the ventilator duct diameter (in m).

or

(c) install a horizontal sub-ceiling below the extraction ventilator openings. ESFR sprinklers shall be located below the sub-ceiling in accordance with the normal spacing requirements, see TB209.F2. The sub-ceiling shall have a minimum diameter or cross-sectional dimension W given by either of the equations below.

If the ventilation airflow rate is known:

$$W = \frac{Q}{283\,h}$$

If the ventilation airflow rate is unknown:

$$W = \frac{2{,}6\,A^*}{h}$$

where

Q is the ventilator air flow rate (in m^3/min);

A^* is the ventilator opening area (in m^2)

h is the vertical distance between ceiling and top of the sub-ceiling (in m).

Ceiling sprinklers shall be a horizontal distance of at least 0,7 times the sprinkler spacing from the perimeter of the sub-ceiling.

COMMENTARY AND RECOMMENDATIONS ON TB209.9.5

(a) Powered ventilators and fire dampers should preferably be stopped before the first sprinkler operates. Fire detection systems should be either:

(i) aspirating smoke detectors installed in all ventilation ducts extracting from the ESFR protected risk; or

(ii) a fire detection system of detection performance equivalent to an aspirating smoke detection system.

(b) If the air flow rate through the ventilator is not known then the duct velocity should be measured using a suitable device such as Pitot tube and micromanometer. The air flow rate Q (in m^3/min) through a circular section duct may be calculated using the equation:

$$Q = \frac{49}{60} Av$$

where

A is the cross-sectional area of a circular duct (in $m^{2)}$

v is the maximum velocity through the duct (in m/min)

TB209.9.6 Walkways and conveyors

Walkways and conveyors, not exceeding 3,0m width, shall be protected underneath by a centrally located single row of ESFR sprinklers or spray pattern sprinklers. The sprinklers shall be spaced not more than 3,0m apart. Walkways and conveyors exceeding 3,0m width shall be treated as mezzanines.

TB209.9.7 Sprinkler protection beneath mezzanines

Where the height of the mezzanines above the floor exceeds 4,5m, the underside of the mezzanines shall be protected by ESFR sprinklers. Where the height of the mezzanines above the floor is 4,5m or less, ESFR or appropriate spray pattern sprinkler protection may be employed.

Where mezzanines have openings into the protected building, the storage beneath the mezzanine shall not be closer to the open face than:

(a) the outside line of sprinklers beneath the mezzanine, if there is no vertical smoke curtain of at least 600mm depth; or

(b) within the bounds of a 600mm deep smoke curtain.

COMMENTARY AND RECOMMENDATIONS ON TB209.9.7

Where spray pattern sprinkler protection is used below low mezzanines, it should fully comply with the appropriate BS EN clauses and LPC Technical Bulletins. See also TB209.10.6.5.

TB209.9.8 Alarm signalling

On operation of the sprinkler system or any fire detection system an alarm shall be automatically transmitted to an LPCB (or equivalently) approved central station for fire alarm signalling. Alarm transmission systems shall comply with BS EN 16.3 and shall employ LPCB (or equivalently) approved signalling equipment.

TB209.10 ESFR SPRINKLER INSTALLATION DESIGN

TB209.10.1 Installation type

Sprinkler installations shall be of the wet-pipe type.

TB209.10.2 Selection of sprinklers

Sprinklers shall be approved to an appropriate standard. In the UK, LPCB approved products are listed in the current *LPCB List of approved fire and security products and services* (see TB201).

TB209.10.3 Sprinkler shank thread and nominal k factor

The sprinklers used shall be in accordance with Table TB209.T14.

Table TB209.T14 Sprinkler nominal k factor and shank thread relationship

Sprinkler nominal k factor ($\ell.min^{-1}.bar^{-½}$)	Sprinkler pattern	Sprinkler shank thread (mm)
115	Spray	20
200 and 242	ESFR	20
320 and 360	ESFR	25

TB209.10.4 Temperature ratings thermal sensitivity and colour codings

ESFR sprinklers and any spray pattern sprinklers below walkways and mezzanines shall have a quick thermal sensitivity rating. All sprinklers should have one of the temperature ratings given in Table TB209.T15 and be correspondingly colour coded.

Table TB209.T15 ESFR sprinkler temperature ratings and colour codings

Glass bulb sprinklers		Fusible link sprinklers	
Temperature rating (°C)	Colour of bulb liquid	Temperature rating (°C)	Colour of yoke arms
68	red	68 to 74	uncoloured
93	green	93 to 104	white

TB209.10.5 ESFR sprinkler location relative to obstructions at or near the ceiling or roof

ESFR sprinklers shall be located at the appropriate horizontal distance from obstructions at the ceiling or roof such as beams, ducts, joists, distribution pipes, range pipes or light fittings as given in Table TB209.T16.

COMMENTARY AND RECOMMENDATIONS ON TB209.10.5

ESFR sprinklers should be located no closer than 0,1m horizontally from the bottom near side edge of joists, trusses or similar obstructions. In some instances, it may be advantageous to vary ESFR sprinkler spacings across the ceiling to avoid obstructions to the sprinkler water distribution.

Table TB209.T16 ESFR sprinkler location relative to ceiling obstructions such as beams or joists		
Distance 'a'[1] Minimum horizontal distance from sprinkler axis to side of obstruction		Distance 'b'[1] Maximum height of ESFR sprinkler deflector above (+) bottom of obstruction
Greater than (mm)	Less than (mm)	(mm)
100	300	0
300	500	40
500	600	75
600	800	140
800	900	200
900	1100	250
1100	1200	300
1200	1400	380
1400	1500	460
1500	1700	560
1700	1800	660
1800	1850	790
Note 1: See Figure TB209.F3		

TB209.10.6 Pipe sizing (replaces BS EN Clause 13.4 for ESFR sprinkler protection)

ESFR sprinkler installations shall be fully hydraulically calculated. Where spray pattern sprinkler protection is used beneath mezzanines the hydraulic calculation methods of BS EN Clause 13.4 shall be used.

COMMENTARY AND RECOMMENDATIONS ON TB209.10.6

Any pipe layout may be used, subject to the sprinkler spacing and layout requirements. No provisions have been made for determining pipe sizes using precalculated pipe sizing tables.

TB209.10.6.1 Minimum pipe sizes

The nominal bore of distribution pipes and range pipes shall not be less than 25mm.

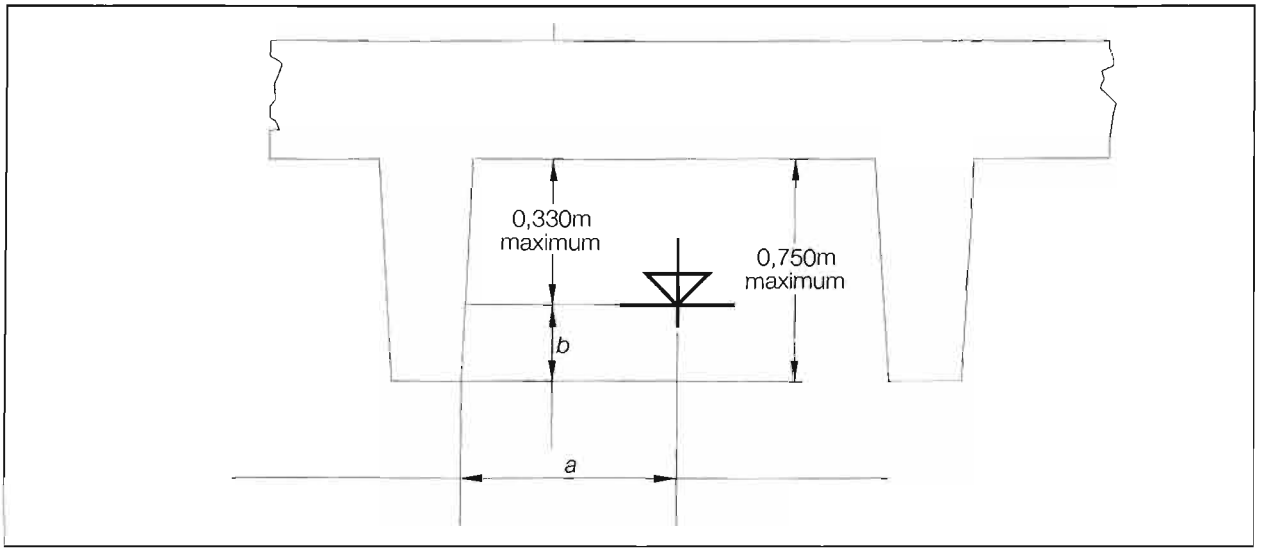

Figure TB209.F3 Sprinkler locations relative to ceiling obstructions

TB209.10.6.2 *Maximum range pipe sizes*

The maximum bore of range pipes shall not exceed 100mm.

TB209.10.6.3 *Minimum ESFR sprinkler flow pressure*

The calculated discharge pressure of any ESFR sprinkler, when all the sprinklers in an AMNOSO plus any additional sprinklers under obstructions are operating, shall not be less than as given in Tables TB209.T2 to TB209.T13 as appropriate.

TB209.10.6.4 *Number of ESFR sprinklers in the AMNOSO*

The number of sprinklers in the AMNOSO shall be 12, except for mezzanines less than 4,0m high where the AMNOSO shall be 6, plus any additional sprinklers deemed to be operating such as sprinklers under obstructions, walkways or conveyors or intermediate level sprinklers, see TB209.10.7, TB209.10.8 and TB209.11.

COMMENTARY AND RECOMMENDATIONS ON TB209.10.6.4

Intermediate sprinklers should only be included in the AMNOSO if they are fed by the same installation valve as the ESFR sprinklers (see BS EN Clause 7.2.3.1).

TB209.10.6.5 *Shape of AMNOSO*

To determine the water supply capacity and for pipe sizing purposes, the AMNOSO shall be taken as four sprinklers operating on each of three range pipes, plus any additional sprinklers. Where ESFR sprinklers are used to protect storage areas beneath mezzanines and where the AMNOSO is reduced to six ESFR sprinklers, then three sprinklers shall be assumed to operate on each of two ranges.

COMMENTARY AND RECOMMENDATIONS ON TB209.10.6.5

Where range pipes have fewer than the designated number of ESFR sprinklers per range, all the sprinklers shall be assumed to be operating, and the number of ranges involved should be increased to compensate.

TB209.10.6.6 *Location of hydraulically most unfavourable AMNOSO*

Changes in sprinkler spacing, array design, elevation, range spacing as well as possible location, whether on or between distribution pipes, shall be considered for the hydraulically most unfavourable location of the AMNOSO.

COMMENTARY AND RECOMMENDATIONS ON TB209.10.6.6

Full calculation for each possible location is necessary except where it is obvious that an array is similar to another array under consideration and hydraulically nearer the water supply. Continuous operation of the AMNOSO at the hydraulically most unfavourable location creates the most adverse pressure. This is used to establish that the minimum ESFR sprinkler flow pressure is achieved.

TB209.10.6.7 *Location of hydraulically most favourable AMNOSO*

Changes in sprinkler spacing, array design, elevation, range spacing, as well as possible location, whether on or between distribution pipes, shall be considered for the hydraulically most favourable location of the AMNOSO.

COMMENTARY AND RECOMMENDATIONS ON TB209.10.6.7

Continuous operation of the AMNOSO at the hydraulically most favourable location defines the flow rate which is used to determine that the pipework design is compatible with the water supply pressure-flow characteristic.

Proof of correct position in gridded systems is established by displacing the area of operation by one sprinkler pitch in each direction along ranges and by one range pipe in each direction along distribution pipes.

TB209.10.7 Sprinklers beneath obstructions etc

Any additional ESFR sprinklers beneath obstructions within the AMNOSO, shall be assumed to be operating, at not less than the specified ESFR sprinkler flow pressure as defined in Tables TB209.T2 to TB209.T13.

COMMENTARY AND RECOMMENDATIONS ON TB209.10.7

See also TB209.11 for additional intermediate sprinkler requirements.

See also Table TB209.T5.

TB209.10.8 Sprinklers beneath walkways and conveyors

Where sprinklers are installed below walkways, as required by TB209.9.6, two sprinklers shall be assumed to operate at a pressure given in Table TB209.T17. It shall be assumed that the ceiling sprinklers and two sprinklers beneath each walkway in an area of operation are in simultaneous operation.

Table TB209.T17 Minimum operating pressure for sprinklers beneath walkways and conveyors

Sprinkler nominal k factor ($\ell.min^{-1}.bar^{-½}$)	Sprinkler pattern	Minimum operating pressure (bar)
115	Spray	3,5
200	ESFR	3,5
242	ESFR	2,4
320	ESFR	1,7
360	ESFR	1,4

TB209.10.9 Sprinkler spacing pattern

ESFR sprinklers shall be installed in standard layout pattern (see BS EN Figure 8).

TB209.10.10 Sprinkler spacing and location

The area of coverage and spacing of ESFR sprinklers shall comply with Table TB209.T18.

Table TB209.T18 ESFR sprinkler spacing

Ceiling height (m)	Distance between sprinklers		Area of coverage per sprinkler	
	Minimum (m)	Maximum (m)	Minimum (m^2)	Maximum (m^2)
≤ 9	2,4	3,7	7,5	9
> 9 ≤ 13,7	2,4	3	7,5	9

TB209.10.11 Sprinkler positioning relative to roof and ceilings

Sprinklers shall be located beneath the ceiling in accordance with Table TB209.T19

Table TB209.T19 Sprinkler distance from the underside of the ceiling

Sprinkler nominal k factor ($\ell.min^{-1}.bar^{-½}$)	Sprinkler pattern	Vertical distance from the underside of the ceiling to the sprinkler deflector	
		Not less than (mm)	Not more than (mm)
115	Spray	75	150
200 and 242	ESFR	125	355
320 and 360	ESFR	100	460

COMMENTARY AND RECOMMENDATIONS ON TB209.10.11

Where roofs or ceilings are constructed using beams and girders or profile panelling, sprinklers should be located in the bays rather than under beams. Bays formed by these methods of ceiling construction should not exceed 750mm depth. Where the ceiling is profiled the distance from the ceiling shall be measured from the top of the profile, see Figure TB209.F3. The deflector position relative to ceiling profiling should comply with TB209.10.5.

TB209.10.12 Sprinkler orientation relative to the floor or pipework

ESFR sprinklers shall be installed with the waterway axes perpendicular to the floor or ceiling.

TB209.10.13 Clear space below sprinklers

Throughout the protected area the clear space below ESFR sprinklers (including any mezzanines) shall be at least 1,0m.

TB209.10.14 Sprinkler location relative to draught or smoke curtains

Where draught or smoke curtains are fitted at the ceiling level, forming bays, the draught or smoke curtain shall be treated as a boundary.

TB209.10.15 Positioning of ESFR sprinklers relative to draught or smoke curtains

Where draught or smoke curtains are required by the fire authorities within ESFR sprinkler arrays, the sprinklers on either side of the draught or smoke curtain should be of equal distance (±200mm), from the smoke curtain.

COMMENTARY AND RECOMMENDATIONS ON TB209.10.15

The distance of sprinklers from the draught or smoke curtain may vary along the length of the draught or smoke curtain if there are changes in sprinkler spacing.

TB209.10.16 ESFR sprinkler protection adjacent to areas protected by standard sprinklers

Where ESFR sprinkler protection adjoins areas protected by standard sprinklers, the following measures shall be complied with:

(a) where ESFR and the adjacent standard sprinklers are at the same ceiling height or where ESFR sprinklers are installed at a greater ceiling height than standard sprinklers, smoke curtains shall be installed at the ceiling separating ESFR and standard sprinklers. The smoke curtains shall be at least 600mm deep and shall be located at the mid-point between the ESFR and standard sprinklers. The smoke curtain shall be made of non-combustible material.

(b) an aisle 1,2m wide, free of all stored goods, shall be maintained between ESFR protected areas and those protected by standard sprinklers. The centre of the aisle shall coincide with the mid-point between the ESFR and standard sprinklers.

TB209.11 INTERMEDIATE SPRINKLERS IN ESFR PROTECTED OCCUPANCIES

Where indicated, ESFR protection specified in Table TB209.T3, right-hand column allows for extended storage heights in racks provided intermediate sprinkler protection is installed. Intermediate sprinklers shall be in accordance with the following requirements:

(a) at least one level of intermediate sprinkler protection shall be installed;

(b) the vertical distance from the floor to the intermediate sprinklers shall be half the rack height plus or minus half the tier height;

(c) intermediate sprinklers shall have the following properties:

(i) spray pattern sprinkler;

(ii) k factor of 115ℓ.min^{-1}.bar^{2};

(iii) quick response thermal sensitivity rating;

(iv) nominal temperature rating within the range of 68°C to 104°C.

(d) intermediate sprinklers shall be located at each longitudinal and transverse flue intersection at a maximum spacing of 1,5m in either direction;

(e) metal water shields of nominal diameter 75mm shall be fitted above each intermediate sprinkler;

(f) at least eight intermediate sprinklers shall be assumed to be operating;

(g) the minimum pressure of any operating intermediate sprinkler shall be 3,5bar;

(h) the water supply shall have sufficient capacity for the simultaneous operation of ESFR sprinkler plus the flow requirement for the intermediate sprinklers, see TB209.12.2 and TB209.12.4

TB209.12 WATER SUPPLIES

TB209.12.1 Pump drive and power arrangements (replaces BS EN Clause 10.1 for ESFR protection)

(a) pumpsets shall be in accordance with BS EN 12259-12. The pump shall have a stable H(Q)-curve;

(b) the pumpset shall meet the duty points, taking into account the cooling flow;

(c) pumps should be driven either by electric motors or diesel engines, capable of providing at least 110% of the power required to cover:

(i) pumps with non-overloading power characteristic curves – the maximum power required at the peak of the power curve; or

(ii) pumps with rising power characteristic curves – the maximum power for any conditions of pump load, from zero flow to a flow corresponding to a pump net positive suction head (NPSH) required equal to (maximum suction static head plus 11m) or 16m, whichever is greater.

(d) diesel engine drivers for pumpsets shall have a 6 hour rating (determined as specified in BS 5514), at not less than the power requirement specified at TB209.12.1 (c);

(e) nominal rated speed of diesel engine driven pumps shall not exceed 2600rpm;

(f) power to drive the pumps shall be available at all times;

(g) the electric supply to electrically driven pumps shall be obtained from a public electricity supply or other reliable source.

COMMENTARY AND RECOMMENDATIONS ON TB209.12.1

Pumps having a non-overloading power characteristic are preferred.

Some of the authorities listed in BS EN Clause 3.13 may have requirements relating to the approval of installers of automatic pumps.

Where the electricity supply is not taken from a public source full particulars of the generating plant should be submitted to the authorities concerned at the planning stage.

Generating plant engine fuel tanks should be kept fully filled when in the stand-by condition. See also BS EN Clause 18.2.5 for pump name plate marking.

TB209.12.2 Pump selection

For each ESFR system there shall be:

(a) at least two full capacity suction pumps, one of which shall be diesel driven. Each pump when operating alone shall provide not less than Q_{max}. for an AMNOSO at sprinkler head operating pressures of not less than that specified in TB209.7.1 plus any flow needed for pump cooling. The pumps shall have compatible pressure flow characteristics so that when operating in parallel neither pump shall be overloaded at any point within the specified range of output flows; or

(b) three half capacity suction pumps, two of which shall be diesel driven. Each pump shall have compatible flow characteristics so that when operating in parallel it is not overloaded at any point within the specified range of output flows. A flow of Q_{max} for an AMNOSO and sprinkler head operating pressure of not less than that specified in Tables TB209.T2 to TB209.T13 as appropriate, plus any flow needed for pump cooling, shall be provided by any combination of two pumps operating in parallel.

TB209.12.3 Pressure or flow switch starting devices

The starting devices shall be housed in an enclosure with a degree of protection not less than IP65 as specified in BS EN 60529.

TB209.12.4 Water source

The water source for ESFR sprinklers shall have a system design capacity of not less than $0{,}060Q_{max}$ m^3, see TB209.12.6. The water source shall comprise a minimum of two independent LPCB (or equivalently) approved suction tanks, each tank having a capacity of not less than half the system design capacity.

COMMENTARY AND RECOMMENDATIONS ON TB209.12.4

Concrete tanks designed and constructed in accordance with BS 8007, with rigid roofs of concrete, metal or glass fibre reinforced plastic may be considered suitable.

All sprinkler tanks should comply with the Water Byelaws.

TB209.12.5 Pump cooling (replaces BS EN Clause 10.9.3)

Provision shall be made to ensure a continuous and adequate flow of water through the pump to prevent overheating when the pump is operating in the closed valve condition. The cooling flow shall be taken into account in the pump selection. There shall be clear visual indication of flow in or from any cooling lines and where there is more than one pump the cooling lines shall be separate. Provision shall be made for disposal of cooling water.

TB209.12.6 Pump performance

An automatic suction pump shall operate continuously up to a flow equal to any flow for cooling (see BS EN Clause 10.9.3) plus Q_{max}. with the water supply at the normal water level. Pump outlet pressures shall fall with increased output (stable output).

The net positive suction head (NPSH) required by the pump shall not exceed 5,0m of water under any flow condition up to Q_{max}. See Figure TB209.F4.

COMMENTARY AND RECOMMENDATIONS ON TB209.12.6

To ensure that the commissioned installation satisfies the performance requirements consideration should be given to adding a head margin at the pump selection and works test stage. Increasing the pump outlet range pressure, with the water level at the low water level 'X' (see BS EN Figure 4) and at the installation at the demand flow rate (that is the flow to achieve the sprinkler operating pressure at the hydraulically most remote AMNOSO) to the required pressure plus 0,5 bar should be sufficient to ensure compliance when the pump is installed.

TB209.12.7 Pump outlet flow limiting orifice plates

If a flow limiting outlet orifice plate is used it shall be integral with the pump outlet, or fixed to the pump outlet in such a way that it remains so fixed. The k factor of a non-integral orifice plate shall be calculated from:

$$k = Q / p^{1/2}$$

where

Q = the flow rate (in ℓ/min)

p = the pressure drop (in bar) across the orifice plate with flow Q

COMMENTARY AND RECOMMENDATIONS ON TB209.12.7

An orifice plate used to hydraulically balance an installation, or to accommodate pump characteristics, should:

(a) have an orifice diameter not less than one half of the internal diameter of the pipe into which it is fitted;

(b) be manufactured of brass with a plain central hole without burrs, and of a suitable thickness (but not less than 9mm).

(c) have an identification tag, projecting beyond any flanges between which it is clamped, on which should be clearly stamped the nominal pipe diameter and the orifice k factor.

TB209.12.8 Maximum pressure

The pressure shall not exceed 12bar in any part of the installation with the water supply at the normal water level, taking into account any rise in driver speed and pressure or jockey pump operation. Allowance shall also be made for increase or decrease in the pressure caused by variation of the water supply pressure at the pump suction flange.

COMMENTARY AND RECOMMENDATIONS ON TB209.12.8

A maximum pump outlet pressure of 10bar is preferred.

TB209.12.9 Pump suction conditions (replaces BS EN Clause 10.6.1)

Water temperatures shall not exceed 25°C.

Pumps shall have positive suction head conditions.

A pump shall be regarded as being under positive suction head if it draws water from a stored water supply where not more than 2m depth of water or one third the effective capacity, whichever encompasses the smaller water volume, is contained between the pump centre line and the low water level 'X' (see BS EN Figure 4).

TB209.12.10 Pump suction design (replaces BS EN Clause 10.6.1 for ESFR protection)

It shall not be possible for air to be trapped in the suction pipe. The suction pipes to different pumps shall only be interconnected if each individual pump suction inlet and each suction pipe connection to its water supply is fitted with a stop valve (retained in position by means other than the pump inlet flange). Any connection between suction pipes shall be upstream of the stop valve at the pump suction inlet and shall be of the same nominal inside diameter as the individual suction pipes.

In the normal stand-by condition each pump shall be connected to each suction tank. See Figure TB209.F5.

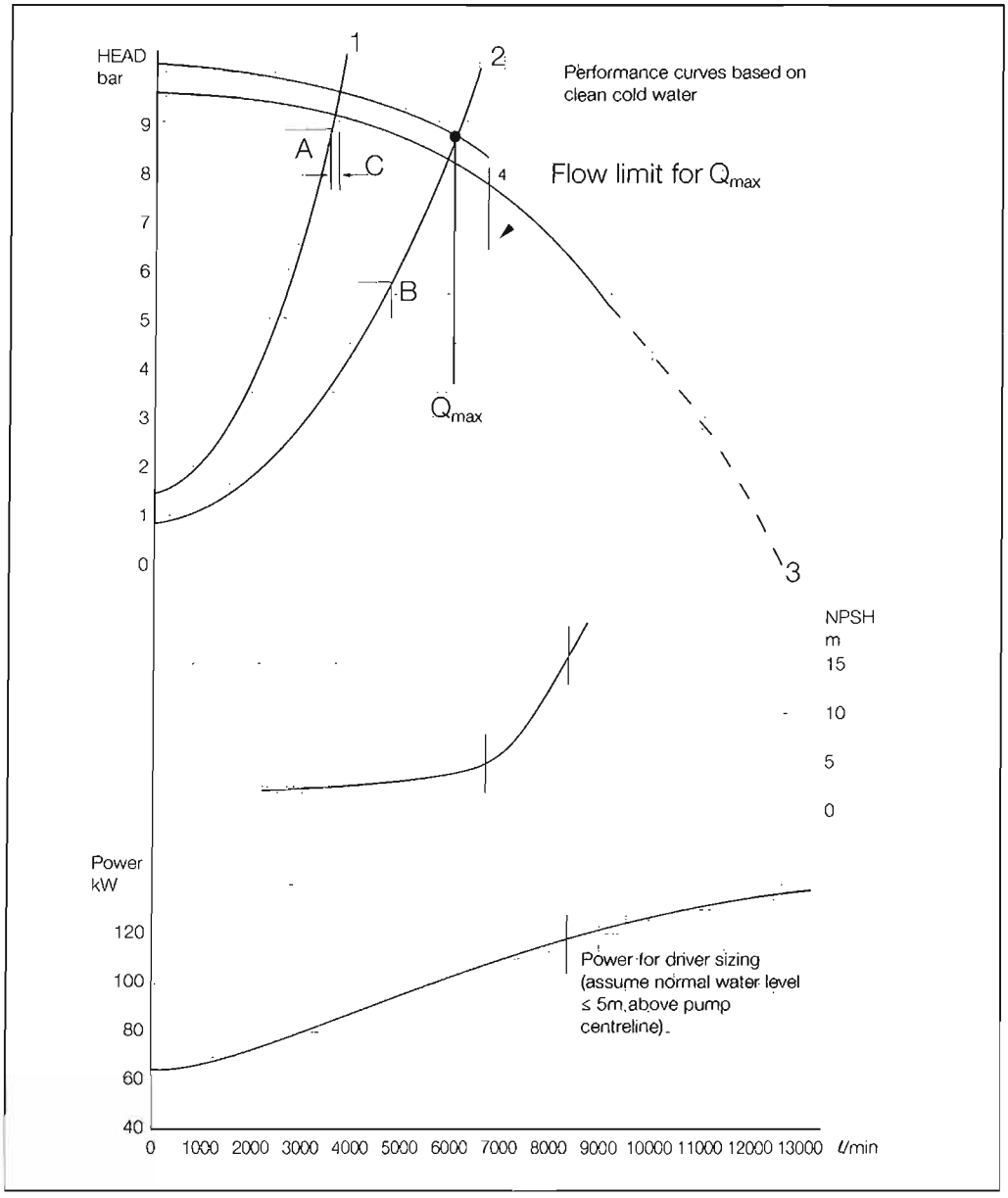

Figure TB209.F4 Typical pump performance curves

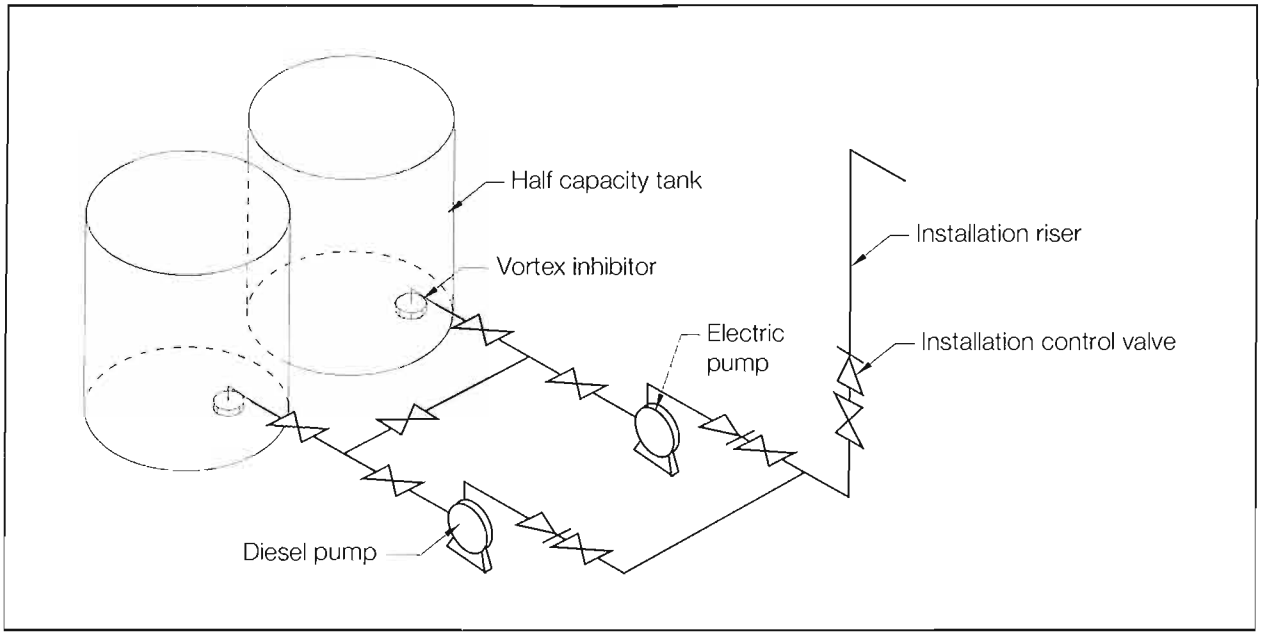

Figure TB209.F5 Two suction pump connections to two half capacity tanks

When one of the suction tanks is isolated for maintenance each pump shall be connected to the remaining suction tank.

The suction pipework and fittings shall be sized to give a maximum water velocity of 1,8m/s at Q_{max}.

TB209.12.11 Net positive suction head (NPSH)

The water supply, suction piping, including all valve any fittings shall be designed such that the net positive suction head (NPSH) at the pump inlet flange shall not be less than 5,5m for the following limiting conditions:

(a) at any flow rate up to Q_{max};

(b) with the water supply at the low water level 'X'(see BS EN Figure 4);

(c) with the maximum anticipated water temperature.

COMMENTARY AND RECOMMENDATIONS ON TB209.12.11

An accurate assessment of NPSH for the system will be required. It should be noted that it may not be possible to use all the limiting values for suction level, pipe velocity and water temperature on one system.

NPSH may be calculated as follows:

$$NPSH = Ps + Pa + Pv + Pf;$$
$$= Ps - Pf + 9{,}884$$

where

Ps is the suction head measured from the low level 'X' to the pump centre line or eye of the impeller (in m);

Pa is the absolute atmospheric pressure, assumed to be 10,194 ($m.H_2O$) at sea level;

Pv is the water vapour pressure assumed to be 0,310 ($m.H_2O$) in the UK;

Pf is the friction loss in suction pipework, ie pipes, fittings, valves etc at flow rate Q_{max} (in m).

TB209.12.12 Pump inlet and outlet pressure gauge tappings

Pump inlet and outlet pressure gauge tappings shall be readily accessible

TB209.12.13 Pump name plate rating

The nominal pressure and flow Q_{max} (excluding any cooling flow) and corresponding shaft speed shall be given on the pump name plate.

TB209 APPENDIX A SUMMARY OF BS EN CLAUSES NOT APPLICABLE FOR ESFR SPRINKLER SYSTEMS

TB209.A.1 Table TB209.A.T20 gives BS EN Clauses which are not applicable for the design, installation and upkeep of ESFR sprinkler systems. It gives the relevant TB209 clause where applicable.

Table TB209.A.T20 BS EN clauses not applicable to ESFR sprinkler installations

BS EN Clause	BS EN Clause Title	Applicable TB209 Clause
7	Hydraulic design criteria	TB209.10
9.2	Town mains	Not applicable
9.3.1	Storage tanks – General	TB209.12.4
9.3.2	Storage tanks – Water volume	TB209.12.4
9.3.4	Storage tanks – Reduced capacity tanks	Not applicable
9.4	Inexhaustible sources – Settling and suction chambers	Not applicable
9.5	Pressure tanks	Not applicable
9.6	Choice of water supply	TB209.12
10.1	Pumps – General	TB209.12.1
10.2	Multiple pump arrangements	TB209.12.2
10.6.1	Suction conditions – General	TB209.12.9 and TB209.12.10
10.6.2.3	Suction lift	TB209.12.9
10.7.1	Pre-calculated systems – LH and OH	TB209.12.6, TB209.7 and TB209.8
10.7.2	Pre-calculated systems – HHP and HHS with no in-rack sprinklers	TB209.12.6, TB209.7 and TB209.8
10.7.3	Calculated systems	TB209.12.6, TB209.7 and TB209.8
10.8.1.1		TB209.12.1
11.2	Dry-pipe installations	Not applicable
11.3	Alternate installations	Not applicable
11.4	Pre-action systems	Not applicable
11.5	Subsidiary dry-pipe or alternate extension	Not applicable
12.1.2		Not applicable
12.4.3		TB209.10.13
13.3	Pre-calculated systems	Not applicable
13.4	Fully calculated systems	TB209.10.6
14	Sprinkler design characteristics and uses	TB209.10.2, TB209.10.3, TB209.10.4 and TB209.10.5
Annex D	Zoning of sprinkler installations	Not applicable
Annex E	Special requirements for high rise systems	Not applicable
Annex F	Special requirements for life safety systems	Not applicable
Annex G	Protection of special hazards	Not applicable

Technical Bulletins TB208, TB211 and TB213 are not applicable to ESFR sprinkler installations.

All other requirements of the *LPC Rules for automatic sprinkler installations* shall be considered applicable.

Automatic sprinkler pump installation

Replaces BS EN Clause 10 and TB220: 2004

BACKGROUND

Pump performance is critical to the performance of many sprinkler systems, consequently it has been decided that whilst the clauses concerning pump selection require interpretation or are under discussion for change, it would be preferable for stakeholders if current proven design and selection practices are maintained. Pump selection and installation design methods specified in *LPC Rules for automatic sprinkler installations incorporating BS 5306-2* were based on *FOC Rules for automatic sprinkler installations* and have had a proven satisfactory service record for many years. These design criteria have therefore been perpetuated by the publication of this Technical Bulletin (TB210) as an alternative to those published in BS EN 12845: 2004 + Amendments 1 & 2.

This 2009 version of the Technical Bulletin incorporates only technical and editorial changes to:

- Background (this clause) (Editorial changes);
- TB210.0 *Introduction* (Editorial changes);
- TB210.10 *Jockey pumps* (Editorial changes)
- TB210.12 (a) *Proving tests* (Technical change).

TB210.0 INTRODUCTION

This issue of TB210 supersedes and replaces all earlier versions of TB210 and should be applied in place of BS EN 12845 Clause 10 'Pumps'. TB226: *Design, installation and maintenance of underground pump chambers*, remains current and should also be referred to where appropriate.

This version of TB210 uses a similar paragraph numbering, headings, structure and equivalent content to BS EN 12845 Clause 10 'Pumps' between:

- BS EN Clause 10.1 'General' ≈ TB210.1 'General';

  to

- BS EN Clause 10.9 'Diesel engine driven pumpsets' ≈ TB210.9 'Diesel engine driven pumpsets'.

Due to the inclusion of additional material in this Technical Bulletin compared to BS EN Clause 10, the paragraph numbering equivalency ends at TB210.10.

TB210.1 GENERAL (REPLACES BS EN 10.1)

The pump shall have a stable H(Q) curve – that is, one in which the maximum head and shut-off head are coincidental – and the total head declines continuously with increasing rate of flow (see EN 12723).

Horizontal pumps shall have a direct drive.

Pumps shall be driven either by electric motors or diesel engines, capable of providing at least the power required to comply with the following:

(a) for pumps with non-overloading power characteristic curves, the maximum power required at the peak of the curve;

(b) for pumps with rising power characteristic curves, the maximum power for any condition of pump load, from zero flow to a flow corresponding to a pump net positive suction head (NPSH) required equal to 16m or maximum suction static head plus 11m, whichever is the greater.

The coupling between the driver and the pump of horizontal pumpsets shall be of a type which ensures that either can be removed independently and in such a way that pump internals can be inspected or replaced without affecting suction or discharge piping. End suction pumps shall be of the 'back pull-out' type. Pipes shall be supported independently of the pump.

COMMENTARY AND RECOMMENDATIONS ON TB210.1

These requirements relate to the pump specification. The pump performance should be verified by the pump manufacturer based on tests carried out in suitable test facilities and evidenced in the pump performance curves.

TB210.2 MULTIPLE PUMP ARRANGEMENTS (IDENTICAL TO BS EN 10.2)

Pumps shall have compatible characteristic curves and be capable of operating in parallel at all possible flow rates.

Where two pumps are installed, each one shall be capable independently of providing the specified flows and pressures. Where three pumps are installed, each pump shall be capable of providing at least 50% of the specified flow at the specified pressure.

Where more than one pump is installed in a high hazard superior or duplicate water supply, no more than one shall be driven by an electric motor.

COMMENTARY AND RECOMMENDATIONS ON TB210.2

Where two electric pumps are being considered, approval should be sought from the authority having jurisdiction for life safety applications and from the fire insurer where property protection is a consideration.

TB210.3 COMPARTMENTS FOR PUMPSETS

TB210.3.1 Compartment design

TB210.3.1.1 Compartment separation (replaces BS EN 10.3.1)

Pumpsets shall be housed in a compartment used for no other purpose than housing fire protection systems. It shall be one of the following (in order of preference):

(a) a separate building having a fire resistance of no less than 60 minutes;

(b) a building adjacent to a sprinkler-protected building with direct access from outside having a fire resistance of no less than 120 minutes;

(c) a compartment within a sprinkler-protected building with direct access from outside having a fire resistance of no less than 120 minutes.

COMMENTARY AND RECOMMENDATIONS ON TB210.3.1.1

Pump house ventilation louvres allowing airflow to or from the outside need not comply with the fire resistance requirements, but the positioning of the louvres should be considered to avoid the possibility of fire transmission through the louvres. See also TB226: *Design, installation and maintenance of underground pump chambers*.

TB210.3.1.2 *Layout (no equivalent BS EN clause)*

Pump houses shall be laid-out such that there is easy unobstructed access from the pump house door to the following items of equipment within the pump house:

(a) pump drivers;

(b) pumps;

(c) controllers;

(d) batteries;

(e) fuel tanks;

(f) suction valves;

(g) delivery valves;

(h) test valves, flow meters and pressure gauges; and

(i) devices requiring maintenance.

Additionally the following devices shall be located adjacent to the door:

(j) installation control valves (when located in the pump house); and

(k) automatic pump starting pressure switches and associated gauging and test valves.

COMMENTARY AND RECOMMENDATIONS ON TB210.3.1.2

Consideration should be given at the planning, design and installation stages to the potential need to replace pumpset assemblies or major sub-assemblies during the life of the building. Space should be made available for the use of lifting gear to remove machinery from within the pump room without resorting to major structural changes. Permanent lifting beams or hard points for attaching lifting equipment may be appropriate to enable safe movement of machinery.

TB210.3.1.3 *Access to gauging, test facilities and control valves (no equivalent BS EN clause)*

All gauges, including any isolation devices, test valves and control valves shall be located no more than 1,7m above floor, walkway or platform level and shall be easily accessible, visible and free of clutter. Where appropriate, platforms, steps or elevated walkways shall be provided to negate trip hazards and obstacles. Positioning gauging, test facilities, control valves or other facilities requiring frequent routine access close to exhaust pipes and manifolds shall be avoided.

TB210.3.2 Pump compartment sprinkler protection (supplements BS EN 10.3.2)

Compartments for pumpsets shall be sprinkler protected. Where the pump compartment is separate, it may be impractical to provide sprinkler protection from the control valve sets in the premises. Sprinkler protection may be provided from the nearest accessible point on the downstream side of the outlet non-return valve of the pump via a subsidiary stop valve secured in the open position, together with a water flow detector in accordance with EN 12259-5, to provide visible and audible indication of the operation of the sprinklers.

The alarm equipment shall be installed either at the control valves or at a responsibly manned location, such as a gatehouse (see BS EN Annex I).

A drain and test valve, which yields a flow equivalent to one sprinkler with a nominal k factor of 80, shall be fitted downstream of the flow alarm to permit a practical test of the alarm system.

Where sprinklers in pump houses are in close proximity to hot surfaces, such as diesel engine exhaust pipes, consideration shall be given to installing sprinkler heads with appropriately elevated nominal temperature ratings or alternatively relocating the sprinkler away from the heat source.

COMMENTARY AND RECOMMENDATIONS ON TB210.3.2

The drain and test valve shall not be less than 15mm DN.

TB210.3.3 Temperature (identical to BS EN 10.3.3)

The pump compartment shall be maintained at or above the following temperature:

- +4°C for electric motor driven pumps; and
- +10°C for diesel engine driven pumps.

TB210.3.4 Ventilation (replaces BS EN 10.3.4)

Pump compartments for diesel engine driven pumps shall be provided with adequate ventilation in accordance with the suppliers' recommendations.

Ventilation, in order of preference, shall be by means of either:

(a) ventilation louvres which open automatically when the pump starts and which fail open in the event of a power supply failure; or

(b) ducted forced ventilation system which shall be started automatically when the pump starts with provisions for continued operation in the event of a mains power failure.

COMMENTARY AND RECOMMENDATIONS ON TB210.3.4

Pump houses for diesel driven pumps should be provided with adequate ventilation for aspiration and heat dissipation purposes, to avoid excessive temperature rise during full load operation and build up of gas from unsealed engine starting batteries. With engine(s) operating on full load, the equilibrium temperature increase should not exceed 10°C.

TB210.3.5 Lighting and power (no equivalent BS EN clause)

Permanent lighting and an electrical power supply shall be provided within the pump house.

COMMENTARY AND RECOMMENDATIONS ON TB210.3.5

Lighting levels throughout the pump house should be at least 500Lux.

Light switches should be located adjacent to the entry to the pump chamber.

TB210.3.6 Test line drainage facilities (no equivalent BS EN clause)

All test lines shall be fitted with an efficient permanent drainage facility.

COMMENTARY AND RECOMMENDATIONS ON TB210.3.6

All drainage facilities should be appropriately sized and located to drain the associated test line in a reasonable period of time. It should be established that the test line is suitably designed, to prevent back-siphoning.

TB210.3.7 Waste water disposal (no equivalent BS EN clause)

Waste water shall be disposed of from the pump house by one of the following means:

(a) preferably, waste water discharges from such as glands, test lines, priming lines, minimum flow lines and cooling systems shall be disposed of through separate drain lines to a permanent drainage system external to the pump compartment. Discharges into drain lines shall be visible; or

(b) where waste water discharges cannot be discharged external to the pump compartment by a gravity system, drain lines or gullies shall direct waste water to a sump within the pump compartment A permanent, suitably sized automatic sump pump shall be used to discharge waste water through a permanent drain line, discharging waste water external to the pump compartment into a permanent drainage system. Should there be a possibility of the pump compartment flooding, the measures specified in TB226 shall be applied.

TB210.4 MAXIMUM TEMPERATURE OF WATER SUPPLY (IDENTICAL TO BS EN 10.4)

The water supply temperature shall not exceed 40°C. Where submersible pumps are utilised, the water temperature shall not exceed 25°C, unless the suitability of the motor has been proven for temperatures up to 40°C, in accordance with prEN 12259-12.

TB210.5 PUMPSET INSTALLATION AND ANCILLARY EQUIPMENT

TB210.5.1 Valves and accessories (identical to BS EN 10.5)

A stop valve shall be fitted in the main fire pump suction pipe and a swing check-type, non-return valve and a stop valve shall be fitted in the delivery pipe.

Any taper pipe fitted to the pump outlet shall expand in the direction of flow at an angle not exceeding 15°. Valves on the delivery side shall be fitted after any taper pipe.

Means for venting all cavities of the pump casing shall be provided unless the pump is made self-venting by arrangement of its branches.

Arrangements shall be made to ensure a continuous flow of water through the pump sufficient to prevent overheating when it is operating against a closed valve. This flow shall be taken into account in the system hydraulic calculation and pump selection. The outlet shall be clearly visible and where there is more than one pump the outlets shall be separate.

Diesel engine cooling circuits usually use the same water. However, if additional water is used, it shall also be taken into account.

TB210.5.2 Pressure gauges (supplements BS EN Clause 15.7)

Pumpset pressure gauges shall be in accordance with BS EN 837-1 or equivalent and shall be selected and installed in accordance with BS EN 837-2. Fluid filled pressure gauges with a nominal size of at least 100mm and an accuracy class of at least 1.6 shall be used. Compound pressure gauges shall be used to measure suction pipe pressures. Delivery pressure gauges shall be mounted remotely from the pump to avoid mechanical shock and connected in accordance with BS EN Clause 15.7.2.

Pressure gauge scale divisions shall not exceed:

(a) 0,2bar for a maximum scale equal to or less than 10,0bar; or

(b) 0,5bar for a maximum scale value of more than 10,0bar.

The maximum scale value shall be of the order of 150% of the maximum pressure.

COMMENTARY AND RECOMMENDATIONS ON TB210.5.2

Should pressure pulses result in large amplitude oscillations of the pressure gauge pointer, a damper should be fitted between the pressure source and gauge connections.

TB210.5.3 Pumpset assembly (no equivalent BS EN clause)

Pumpsets shall be assembled, aligned and tested prior to delivery to site. Each pumpset shall be accompanied by a suppliers' test certificate.

COMMENTARY AND RECOMMENDATIONS ON TB210.5.3

Care should be taken to ensure that the pumpset frame or bedplate is not distorted during transport to the site, handling or installation on site.

TB210.5.4 Pumpset plinths (no equivalent BS EN clause)

Sprinkler pumps shall be installed on either a:

(a) concrete plinth;

(b) machinery foundation;

(c) frame; or

(d) platform.

Whichever installation method is employed, the mounting shall be of sufficient strength and mass to withstand the static and dynamic forces imposed by the pumpset. Concrete plinths shall comply with the pumpset manufacturers' specifications.

COMMENTARY AND RECOMMENDATIONS ON TB210.5.4

Pump installations should comply with the pumpset manufacturers' recommendations, specified in the pumpset data sheet, pump commissioning instructions or equivalent publication.

TB210.5.5 Pumpset installation and fixing (no equivalent BS EN clause)

The following procedures shall be carried out before and during the pumpset installation:

- the foundation shall be checked for position and correct dimensions before the pumpset is put in place;
- the pumpset shall be positioned and levelled on the foundation using shims or packing pieces at the points specified by the pumpset manufacturer. The shims or packing pieces shall support the pumpset frame on at least two sides of any anchor bolt;
- after levelling the pumpset the nuts on the anchor bolts may be partially tightened, systematically and evenly, but not to the final torque setting;
- grout in the anchor bolts;
- after the grout has fully cured the nuts on the anchor bolts shall be tightened to the torque setting recommended by the pumpset manufacturer; and
- where specified by the pumpset manufacturer, the pumpset base shall be grouted to the foundation by filling the pumpset base with grout. The shims or packing pieces shall also be grouted in place with grout extending along the full length of the frame.

The pumpset alignment shall be finally checked after the pipework has been connected to the pump. The pumpset shall not be re-shimmed or moved to accommodate misalignment of the system pipework.

The weight of pump suction pipework, delivery pipework and valves, and any dynamic forces acting on them shall be carried by purpose-made pipe supports and not by the pump branches. Pump test lines shall be adequately anchored and restrained.

COMMENTARY AND RECOMMENDATIONS ON TB210.5.5

The pumpset anchor bolt nut threads should be fully engaged with the bolt, which should extend at least two threads beyond the nut.

Four typical examples of pumpset base frames fixing are shown in Figure TB210.F1.

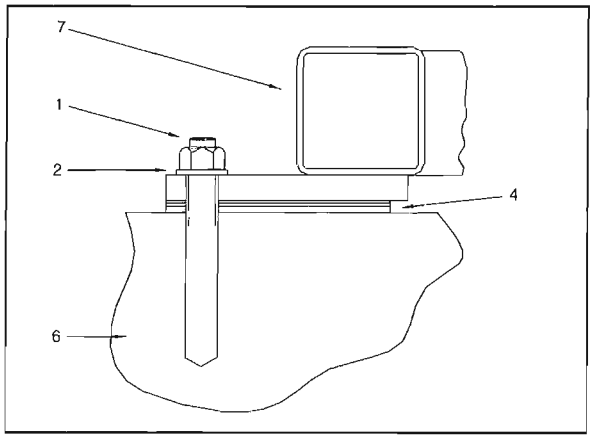

Figure TB210.F1 (a) Square hollow section

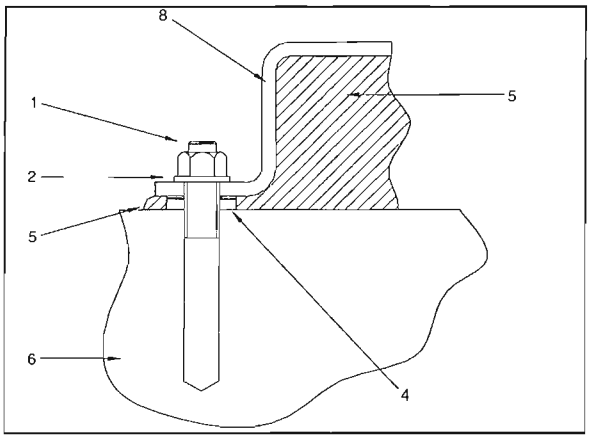

Figure TB210.F1 (b) Folded flanged section

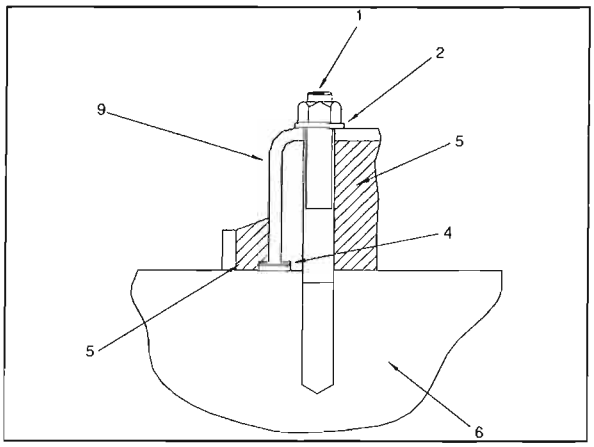

Figure TB210.F1 (c) Folded section

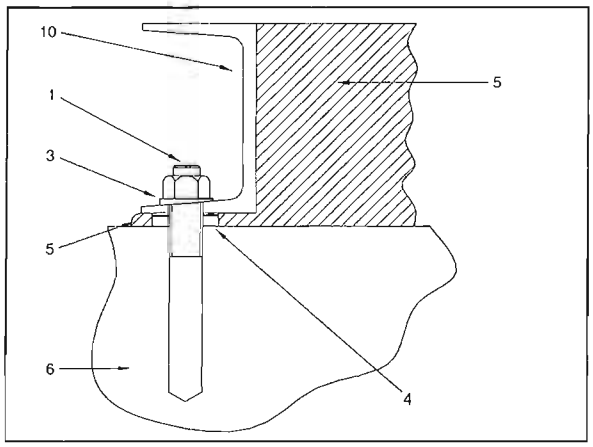

Figure TB210.F1 (d) 'C' channel section

Key

1. Foundation bolt
2. Flat washer
3. Square taper washer
4. Shims or packers
5. Grout
6. Concrete foundation plinth
7. Hollow section base frame
8. Flanged folded base frame
9. Folded base frame
10. Channel section base frame

Figure TB210.F1 Typical examples of pumpset base frame fixing

TB210.6 SUCTION CONDITIONS (REVISION TO BS EN CLAUSE 10.6)

TB210.6.1 General (includes BS EN Clause 10.6 with an additional requirement)

Wherever possible, horizontal centrifugal pumps shall be installed with a positive suction head – that is, in accordance with the following:

(a) at least two-thirds of the effective capacity of the suction tank shall be above the level of the pump centre-line and the pump centre-line shall be no more than 2m above the low water level of the suction tank (level X in BS EN Clause 9.3.5); or

(b) a natural unlimited water supply such as a river, lake or canal, where the centre-line of the pump is at least 0,85m below the lowest known water level.

If this is not feasible, the pump may be installed under suction lift conditions or submersible pumps may be used.

Note: Suction lift and submersible pumps should be avoided and only used when it is not practicable to arrange for a positive suction head.

TB210.6.2 Suction pipe (replaces BS EN Clause 10.6.2)

TB210.6.2.1 General

It shall not be possible for air to be trapped in the suction pipe.

The pump suction shall be connected to a straight or taper pipe at least two diameters long (2 x D), see Figure TB210.F2. The taper pipe shall have a horizontal top side and a maximum included angle not exceeding 15°. Valves shall not be fitted directly to the pump inlet, see Figure TB210.F2.

For suction pipes sized by calculation, the NPSH available shall not be less than 6,38m at the pump flows given in Table TB210.T1, column 4 and pump inlet conditions given in column 5.

Proprietary pipe taper fittings with a combined angle of taper exceeding 15° may be used, providing the taper outlet is connected to a pump suction inlet by a horizontal straight section of pipe which is at least four times the nominal pipe diameter in length (4 x D), see Figure TB210.F3.

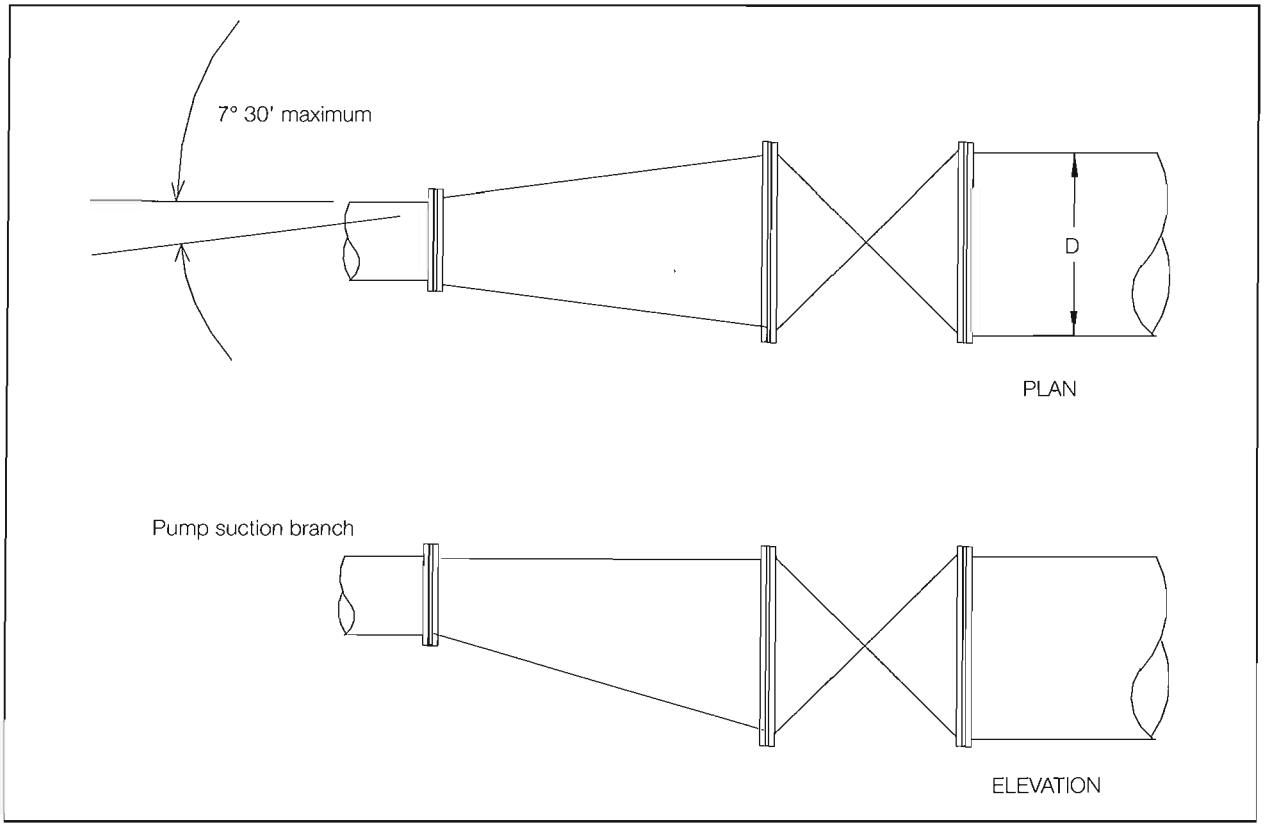

Figure TB210.F2 Pump suction inlet taper

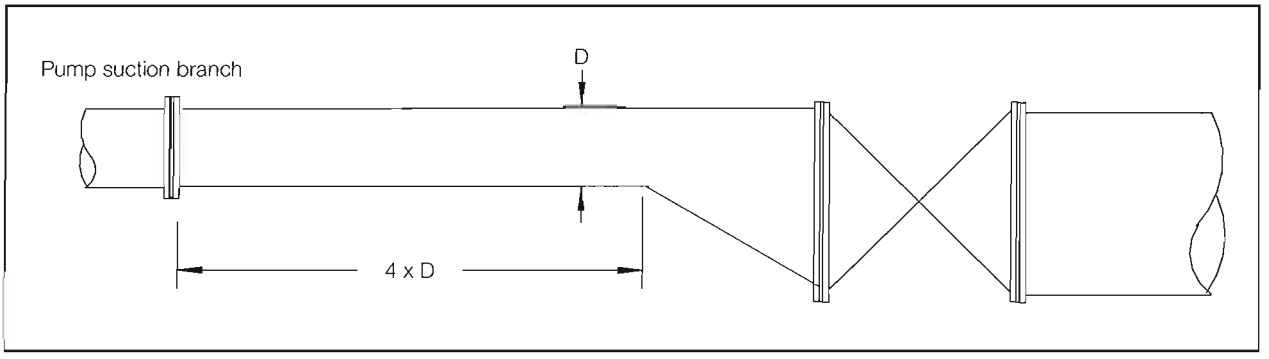

Figure TB210.F3 Pump suction inlet taper (>15°)

Bends or changes in the direction of pipework, upstream of the pump suction inlet taper, shall be formed using long sweep bends.

Pump suction isolating valves shall be of the gate valve type, complying with BS EN 1171, BS 5154, BS EN 1984 or BS EN 12288.

Table TB210.T1 Pump suction and flow rating (replaces BS EN Table 14)

Pipework	Pump type	Hazard Class	Pump flow[1]	Pump inlet condition
Pre-calculated	Suction	LH/OH	Nominal flow from Table TB210.T5	Water supply at low water level X (See BS EN Clause 9.3.5)
Pre-calculated	Booster	LH/OH	Nominal flow from Table TB210.T5	Zero town main pressure
Fully calculated	Suction	All	Maximum demand flow[2]	Water supply at low water level X (See BS EN Clause 9.3.5)
Fully calculated	Booster	All	Maximum demand flow	Zero town main pressure

Note 1: A pump duty point may be stated on the nameplate which is not the nominal or maximum demand flow providing that it can be demonstrated that the pump flow characteristic can exceed the system maximum demand flow conditions.
Note 2: Maximum demand flow is defined in EN 3.42 as 'The flow at the point of intersection of the pressure-flow demand characteristic of the most favourable area of operation and the water supply pressure-flow characteristic with the suction source at its normal water level'.

Suction pipes shall be designed and installed such that no air is trapped within the suction pipe.

A foot valve shall be fitted to the suction pipe where either:

(a) not less than one-sixth of the effective stored capacity is contained below the centre-line of the pump and the low water level X (see BS EN Clause 9.3.5); or

(b) the pump centre-line is not more than 0.85m below the lowest water level of an inexhaustible source.

Where water is drawn from open water sources – such as rivers, lakes or canals – a strainer shall be fitted on the inlet.

COMMENTARY AND RECOMMENDATIONS ON TB210.6.2.1

NPSH may be calculated as follows:

$NPSH = P_S + P_a - P_v - P_f$

$NPSH = P_S + 9{,}884 - P_f$

Where

P_S is the suction head measured from the low water level 'X' (see BS EN Figure 4) to the pump centre-line or eye of the impeller (in m);

P_a is the absolute atmospheric pressure, assumed to be 10,194 at sea level (in m);

P_v is the water vapour pressure, assumed to be 0,310 in the UK (in m);

P_f is the friction loss in suction pipework, which should include all pipes fittings and valves, at the maximum demand flow (in m).

Where the pump centre-line is above the low water level 'X', P_S will be negative, however, in all installations NPSH should be equal to or greater than 6,38m.

Submerged foot valves and strainers should be assembled to pipe sections which may be disconnected and removed. Pipework and valves intended to be removed should be fitted with suitable lifting eyes. Consideration should be given to the provision of guides or runners to enable the assembly to be removed and repositioned without causing damage or stressing other components, see Figure TB210.F4. Stop valves, where necessary, should be installed upstream of any foot valves which are located external to the water storage, see Figure TB210.F5.

The strainer should be constructed from non-ferrous material with an aggregate open area of at least 1.5-times the cross-sectional area of the suction pipe. The strainer openings should prevent the induction of a solid sphere of 5mm diameter.

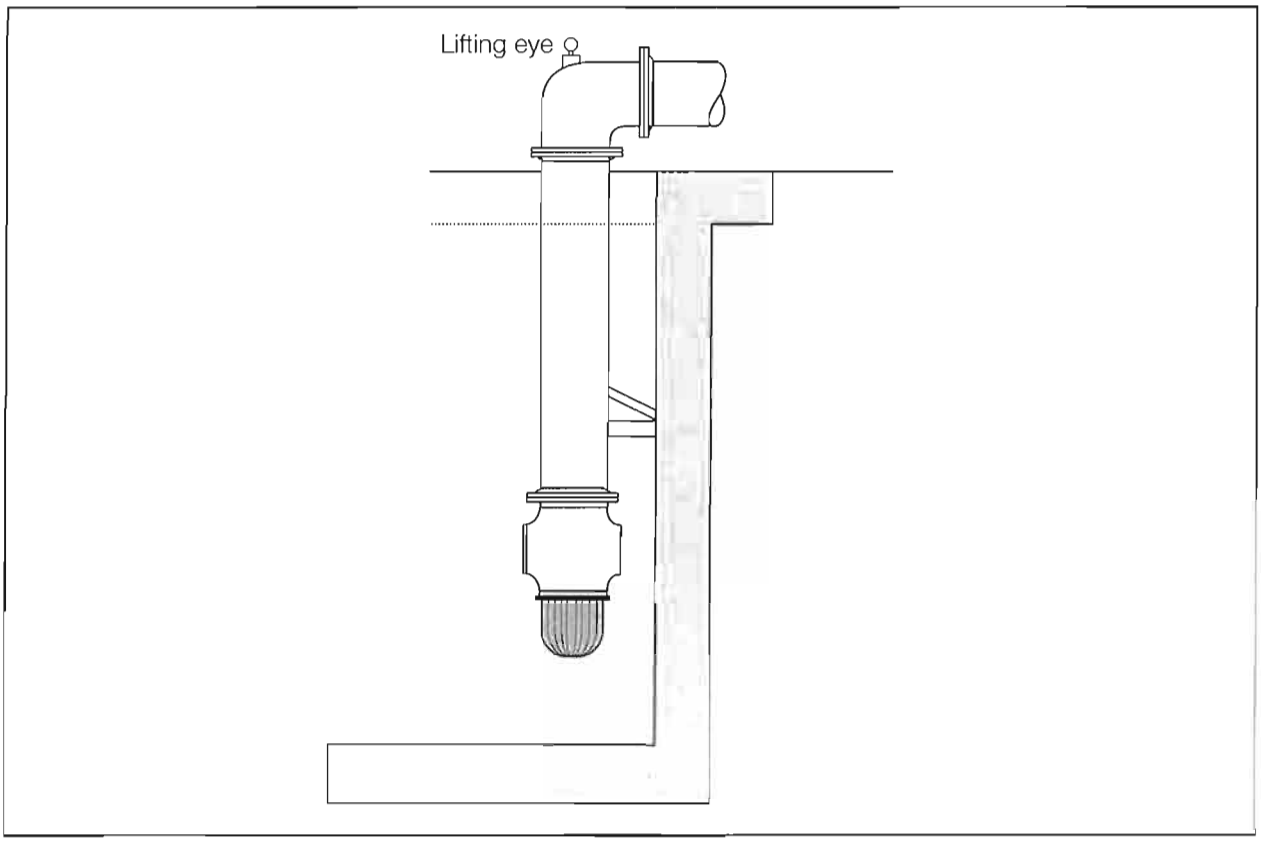

Figure TB210.F4 Typical suction lift foot arrangement

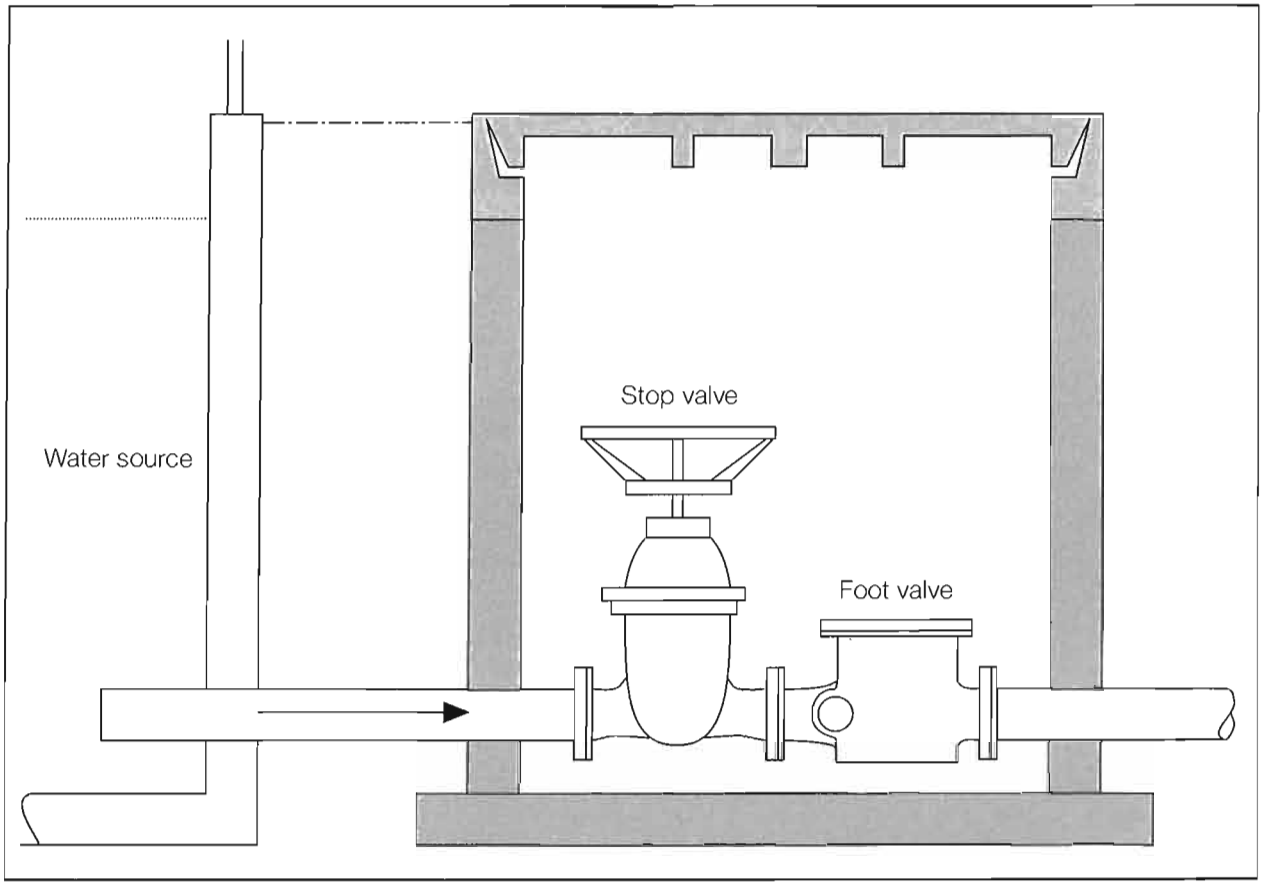

Figure TB210.F5 External foot and stop valve assembly

TB210.6.2.2 *Positive head*

In positive head conditions, the diameter of the suction pipe shall be no less than 65mm.

For LH and OH pre-calculated pipework systems the suction pipe shall be either:

(a) an equivalent length of the suction pipe and fittings of not more than 30m and the suction pipe and fittings shall be sized as specified in Table TB210.T2; or

(b) sized such that the maximum water velocity shall not exceed 1,8m/s when the pump is operating at the flow given in Table TB210.T1.

For all hydraulically calculated pipework systems the suction pipe maximum water velocity shall not exceed 1,8m/s when the pump is operating at the flow given in Table TB210.T1.

Table TB210.T2 Suction pipe and pipe fitting sizes for positive suction head conditions and pre-calculated pipework

Hazard class	System	Minimum nominal size of suction pipe and pipe fitting mm
LH	Wet or pre-action	65
OH 1 and 2	Wet or pre-action	150
OH 1	Dry or alternate	150
OH 3 and 4	Wet or pre-action	200
OH 2 and 3	Dry or alternate	200

Where more than one pump is provided, the suction pipes may only be interconnected if they are fitted with stop valves to allow each pump to continue operating when the other is removed for maintenance. The connections shall be dimensioned as appropriate for the flow rate required. Any connection between the suction pipes shall be upstream of the stop valve at the pump suction inlet and shall be of the same nominal inside diameter as the individual suction pipes.

A single suction header pipe may be used to feed more than one pump. The header pipe shall be sized to suit the maximum system demand flow. Branches connecting pumps to the header pipe shall be of the same nominal size as the header and shall include an isolating valve.

COMMENTARY AND RECOMMENDATIONS ON TB210.6.2.2

Care must be taken to ensure that air is not trapped at any down turn bend at the inlet end of the suction. Provision should be made to remove air which may rise to the pump casing.

Where half duty pumps are fed from a common header pipe, the branch to each pump need only be sized to suit the maximum flow through the pump.

TB210.6.2.3 *Suction lift (supplements BS EN 10.6.2.3)*

In suction lift conditions, the diameter of the suction pipe shall be no less than 80mm.

For all suction pipes the equivalent length of the suction pipe and fittings shall not be more than 30m.

For LH and OH pre-calculated pipework systems the suction pipe shall be either:

(a) sized as specified in Table TB210.T3; or

(b) sized such that the maximum water velocity shall not exceed 1,5m/s when the pump is operating at the flow given in Table TB210.T1.

For all hydraulically calculated pipework systems, the suction pipe maximum water velocity shall not exceed 1,5m/s when the pump is operating at the flow given in Table TB210.T1.

Table TB210.T3 Suction pipe and pipe fitting sizes for suction lift conditions and pre-calculated pipework		
Hazard class	System	Minimum nominal size of suction pipe and pipe fitting mm
LH	Wet or pre-action	80
OH 1 and 2	Wet or pre-action	150
OH 1	Dry or alternate	150
OH 3 and 4	Wet or pre-action	200
OH 2 and 3	Dry or alternate	200

Where there is more than one pumpset installed, the suction pipes shall not be interconnected.

The height from the low water level (see BS EN 9.3.5) to the centre-line of the pump shall not exceed 3,2m.

The suction pipe shall be positioned in the tank or reservoir in accordance with BS EN Figure 4 and BS EN Table 12 or BS EN Figure 5 and BS EN Table 13, as appropriate. A foot valve shall be fitted at the lowest point on the suction pipe. Each pump shall have automatic priming arrangements in accordance with TB210.6.2.4.

Means shall be provided to service foot valves without the need to drain the water source.

TB210.6.2.4 *Pump priming (identical to BS EN 10.6.2.4)*

Each pump shall be fitted with a separate automatic priming arrangement.

The arrangement shall consist of a tank situated at a higher level than the pump and with a pipe connection sloping from the tank to the delivery side of the pump. A non-return valve shall be fitted to this connection. Figure TB210.F6 and F7 show examples of pump priming arrangements and TB210.F8 shows a typical pump starting arrangement.

The tank, the pump and the suction pipework shall be kept constantly full of water even where there is leakage from the foot valve referred to in TB210.6.2.3. Should the water level in the tank fall to two-thirds of the normal level, the pump shall start.

The size of the priming tank and the pipe shall be in accordance with Table TB210.T4.

Table TB210.T4 Pump priming tank capacity and pipe size (identical to BS EN Table 15)		
Hazard class	Minimum tank capacity litres	Minimum diameter of priming pipe mm
LH	100	25
OH, HHP and HHS	500	50

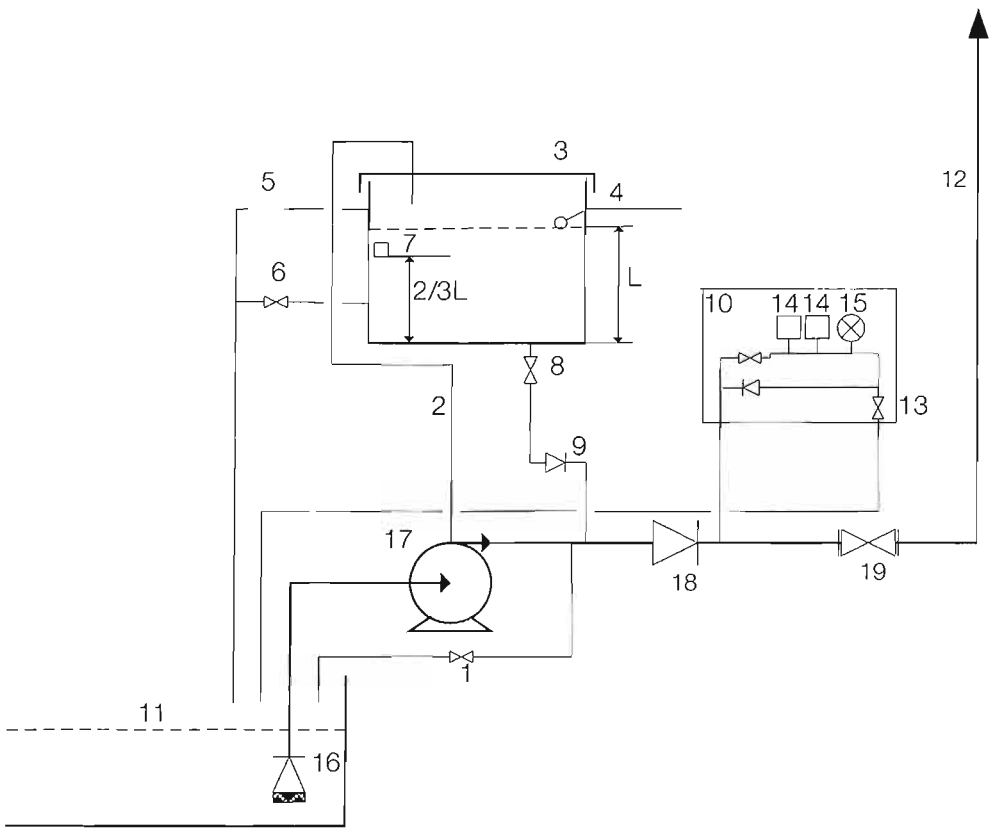

Key

1. Test and drain valve
2. Pump air bleed and minimum flow line
3. Pump priming tank
4. Inflow
5. Overflow
6. Drain valve
7. Low water level pump starting switch
8. Priming supply stop valve
9. Priming supply non-return valve
10. Pump start arrangement
11. Suction tank
12. Installation trunk main
13. Test valve
14. Pressure switch for pump starting
15. Pressure gauge
16. Foot valve and strainer
17. Main pump
18. Pump delivery non-return valve
19. Pump delivery stop valve

Figure TB210.F6 Typical pump priming arrangement for suction lift

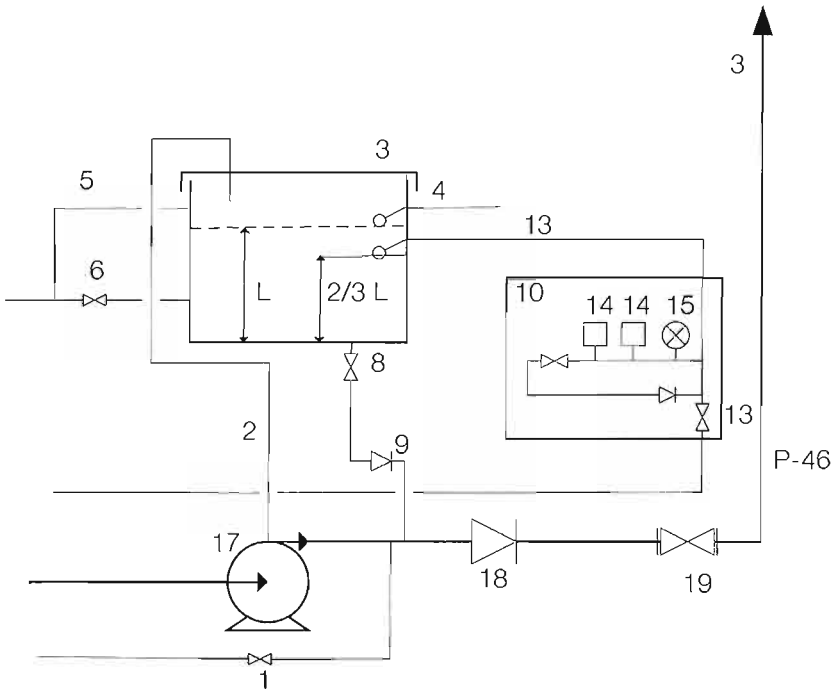

Same key as Figure TB210.F6

Figure TB210.F7 Typical pump priming arrangement for suction lift

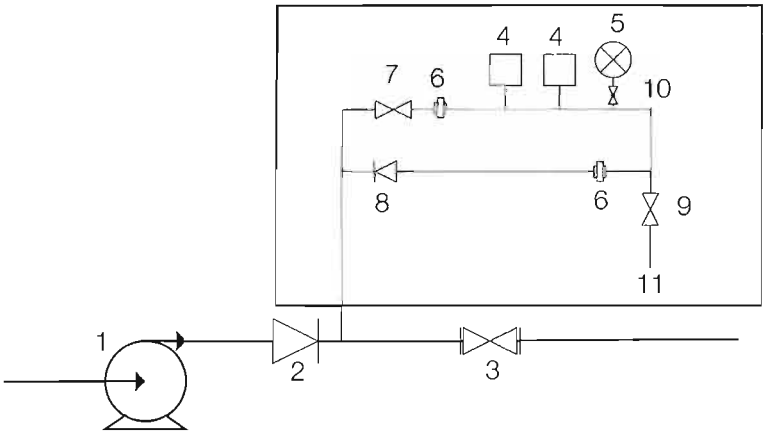

Key

1. Main pump
2. Pump delivery non-return valve
3. Pump delivery stop valve
4. Pump start pressure switch
5. Pressure gauge.
6. Union
7. Isolating stop valve
8. Non-return valve
9. Drain and test valve
10. Gauge cock or equivalent
11. Drain to waste

Figure TB210.F8 Typical sprinkler pump starting arrangement

TB210.7 PERFORMANCE CHARACTERISTICS

The nominal pressure flow (excluding cooling water flow) rating shall be as given in Table TB210.T1.

An automatic suction pump shall operate continuously at any flow rate up to the maximum specified in Table TB210.T1 with a net positive suction head required (NPSHR) of not more than 5,38m of water.

TB210.7.1 Pre-calculated systems – LH and OH

Where the pumps take water from a storage tank, the characteristic of pre-calculated LH and OH systems shall conform to Table TB210.T5.

Table TB210.T5 Minimum pump characteristics for LH and OH (pre-calculated systems) (replaces BS EN Table 16)

Hazard class	(Non-high rise system) Height difference from pump – *h* or (High rise system) Lowest sprinkler in installation – *h* to highest sprinkler in installation m	Nominal data		Characteristic not less than			
		Pressure bar	Flow ℓ/min	Pressure bar	Flow ℓ/min	Pressure bar	Flow ℓ/min
LH (Wet or pre-action)	$h \leq 15$	1,5	300	3,7	225	–	–
	$15 < h \leq 30$	1,8	340	5,2	225	–	–
	$30 < h \leq 45$	2,3	375	6,7	225	–	–
OH1 Wet or pre-action	$h \leq 15$	1,2	900	2,2	540	2,5	375
	$15 < h \leq 30$	1,9	1 150	3,7	540	4,0	375
	$30 < h \leq 45$	2,7	1 360	5,2	540	5,5	375
OH1 Dry or alternate	$h \leq 15$	1,4	1 750	2,5	1 000	2,9	725
	$15 < h \leq 30$	2,0	2 050	4,0	1 000	4,4	725
OH2 Wet or pre-action	$30 < h \leq 45$	2,6	2 350	5,5	1 000	5,9	725
OH2 Dry or alternate	$h \leq 15$	1,4	2 250	2,9	1 350	3,2	1 100
	$15 < h \leq 30$	2,0	2 700	4,4	1 350	4,7	1 100
OH3 Wet or pre-action	$30 < h \leq 45$	2,5	3 100	5,9	1 350	6,2	1 100
OH3 Wet, high rise	$h \leq 15$	1,4+S(2)	2 250	2,9+S(2)	1 350	3,2+S(2)	1 100
	$15 < h \leq 30$	2,0+S(2)	2 700	4,4+S(2)	1 350	4,7+S(2)	1 100
	$30 < h \leq 45$	2,5+S(2)	3 100	5,9+S(2)	1 350	6,2+S(2)	1 100
OH3 Dry or alternate	$h \leq 15$	1,9	2 650	3,0	2 100	3,5	1 800
	$15 < h \leq 30$	2,4	3 050	4,5	2 100	5,0	1 800
OH4 Wet or pre-action	$30 < h \leq 45$	3,0	3 350	6,0	2 100	6,5	1 800

Note 1: For high rise system definition see BS EN 3.32
Note 2: S is the pressure equivalent to the height difference between the pump and the lowest sprinkler in the installation

TB210.7.2 Pre-calculated systems – HHP and HHS with no in-rack sprinklers (replaces BS EN 10.7.2)

This clause is no longer applicable and has been omitted.

TB210.7.3 Calculated systems (replaces BS EN 10.7.3)

To ensure that the commissioned installation satisfies the flow requirements, at the specification and design stage, the pressure at the pump outlet flange, estimated for the water supply at low water level 'X' (see BS EN Clause 9.3.5) the pump shall be a pressure of at least 0,5bar plus the pressure calculated to provide the flow at the most unfavourable area, see Figure TB210.F9.

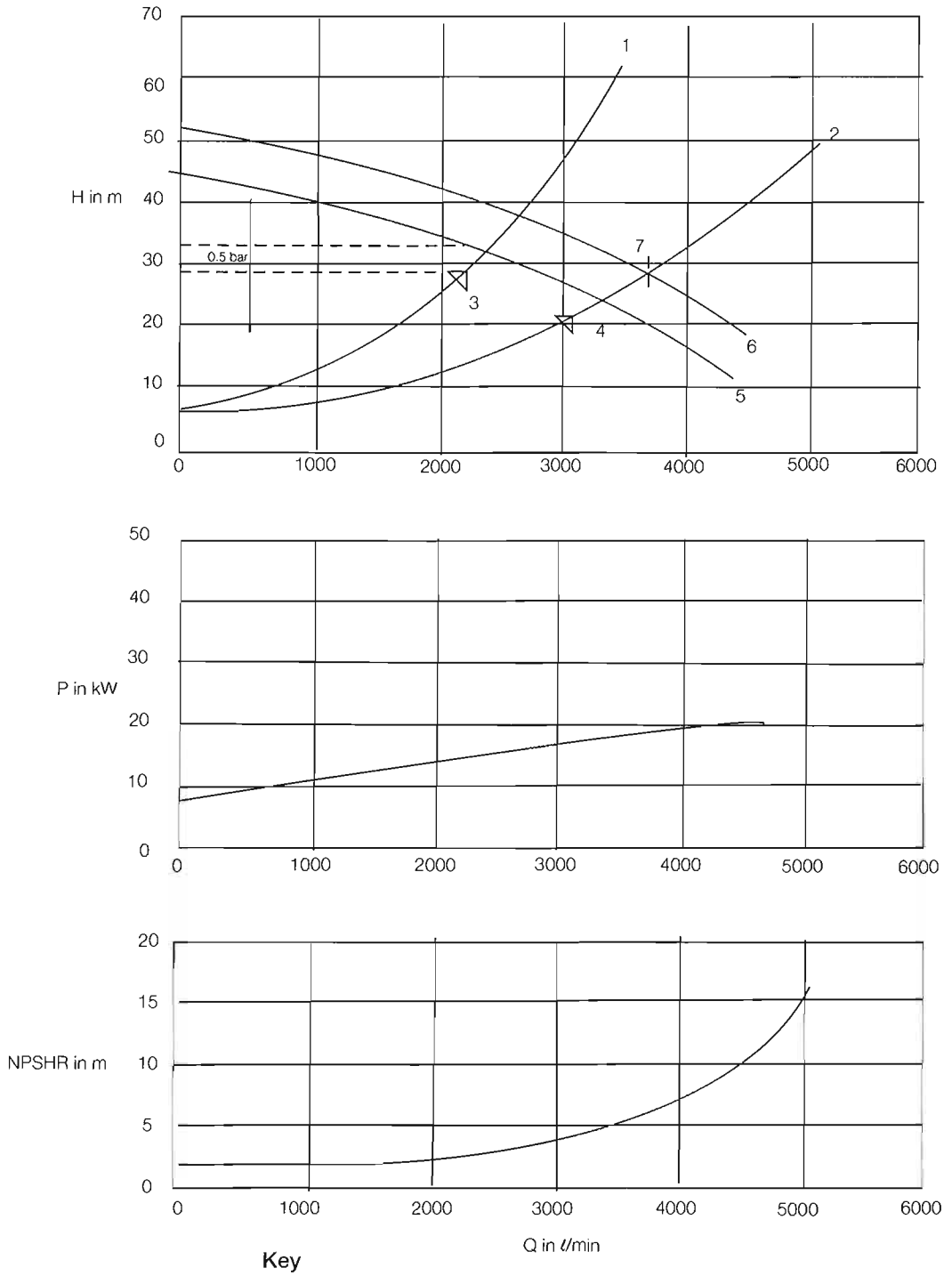

Key

1. Hydraulically most unfavourable area curve
2. Hydraulically most favourable area curve
3. Hydraulically most unfavourable area demand
4. Hydraulically most favourable area demand
5. Pump site performance – low water level 'X' (at pump outlet)
6. Pump site performance – tank full (at pump outlet)
7. Maximum demand flow

Figure TB210.F9 Typical pump curve

TB210.7.4 Pressure and water capacity of boosted town mains (identical to BS EN 10.7.4)

A test shall be carried out to show that the unboosted supply provides a flow rate equal to the maximum demand flow plus 20%, at a pressure of at least 0,5bar, as measured at the pump inlet. This test shall be carried out at a time of maximum demand on the main.

TB210.7.5 Pressure switches

TB210.7.5.1 *Number of pressure switches (identical to BS EN 10.7.5.1)*

Two pressure switches shall be provided to start each pumpset. They shall be connected in series such that opening the contacts of either switch will start the pump with normally closed contacts. The pipe to the pressure switches shall be at least 15mm DN.

TB210.7.5.2 *Pump start (replaces BS EN 10.7.5.2)*

Pumps shall start automatically when the pressure in the trunk main falls to a value of not less than 0,8P, where P is the pressure at the churning pressure of the main pump(s) under closed valve conditions.

Once a sprinkler pump has started, it shall continue to run until stopped manually.

COMMENTARY AND RECOMMENDATIONS ON TB210.7.5.2

In multiple pump systems, it is recommended that the first main pump is set to start at a pressure greater than 0,8P, and that the second main pump of a duplicate pump system and the second and third main pump of a three half capacity pump system be set to start at a lower pressure setting of not less than 0,8P. This is in order to avoid all pumps of multiple pump system from starting simultaneously.

Any jockey pump arrangement should be regulated such that pressure in the trunk main does not exceed (P + 0.5)bar under closed system conditions.

TB210.7.5.3 *Testing the pressure switches (identical to BS EN 10.5.3)*

Means shall be provided for testing pump starting with each pressure switch. If any isolating valve is installed on the connection between the trunk main and any pump starting pressure switch, a non-return valve shall be installed in parallel with the isolating valve so that a fall in pressure on the trunk main will be transmitted to the pressure switch even when the isolating valve is closed, see Figure TB210.F8.

COMMENTARY AND RECOMMENDATIONS ON TB210.7.5.3

It should be possible to test each of the pressure switches independently of the other by design of either:

a) the pressure connection to the pressure switches; or

b) the electrical circuitry.

TB210.8 ELECTRICALLY DRIVEN PUMPSETS (REPLACES TB220)

TB210.8.1 General (identical to BS EN 10.8.1)

TB210.8.1.1 The electric supply system shall be available at all times.

TB210.8.1.2 Up-to-date documentation, such as installation drawings, main supply and transformer diagrams and connections for supplying the pump controller panel as well as motor, control alarm circuits and signals shall be kept available in the sprinkler valve or pump compartment.

TB210.8.2 Electricity supply (replaces BS EN 10.8.2)

TB210.8.2.1 Safety of electrical installations and working on and with electricity is controlled by and with the Health and Safety at Work etc Act 1974 and specifically Electricity at Work Regulations 1989.

All electrical installations shall comply with the IEE Wiring Regulations BS 7671 and the following:

(a) an energy source for electric fire pumps shall be from:

1. a public electricity supply, see Figure TB210.F10 (a) and (b); or
2. a generator set, designed for automatic starting in event of a failure of the primary energy source, details of which shall be agreed by the fire insurer at the planning stage, see Figure TB210.F10(c) and (d);

where there are two or more electrically driven pumps, see Figure TB210.F10 (d):

3. no single electrical failure or operation of a single switch shall render all the pumps inoperable;
4. no single mechanical failure shall render more than one pump inoperable;
5. electrical cable failure external to the pump house by mechanical breakage or fire damage shall not render more than one pump inoperable;
6. the supply shall be designed to meet the combined stalled rotor current of all the connected motors in accordance with TB210.8.2.1 (e);

(b) the power supply feeder from the mains supply to the pump controller shall be separate from the normal services feeder and all other circuits, see Figure TB210.F10;

(c) where a single electrical supply provides power to the building services and a sprinkler pump controller, the electrical supply to the sprinkler pump controller shall be taken from the input side of the main switch on the incoming supply to the premises, see Figure TB210.F10;

Note: Where this is not permitted connections from the main switch should be avoided and a diesel driven pump should be used.

(d) each connection to the power supply, for sprinkler service, shall be via an isolating protective device such as a switch-fuse. The connection shall be reserved solely for sprinkler service and be independent of any main or sub-main circuit;

(e) fuses shall be capable of carrying the stalled rotor current for a period of not less than 75% of the period needed for the motor windings to fail;

(f) any no-volt release mechanism shall be of the automatic resetting type so that on restoration of the supply the motor can be restarted automatically if the trunk main pressure falls;

(g) magnetic and overload trips shall not be used;

(h) each isolating protective device used for sprinkler service shall be secured against unauthorised operation and shall, except for maintenance, be kept locked on;

(i) switchgear for power supplies for sprinkler service shall be situated in a compartment with walls, doors, hatches, partitions and floors having a fire resistance of not less than 60 minutes and used for no other purpose than for electrical power supplies or to house equipment for sprinkler service. All doors shall be self-closing; and

(j) switch rooms supplying power to sprinkler pump motors shall be situated where the fire and rescue service has ready access.

TB210.8.2.2 All cables shall be protected against fire and mechanical damage.

Consideration shall be given to the routing of sprinkler pump motor supply cables to minimise the likelihood of interruption of the power supply:

(a) cables shall be in single lengths, with no joins;

(b) external overhead cable shall not be run above or within 10m of any unprotected building;

(c) cables shall be protected from fire by:

1. running the cable underground;
2. running the cable outside the protected building;
3. running the cable through parts of the protected building where the fire risk is negligible and which is separated from any significant fire risk by walls, partitions or floors with a fire resistance of not less than 60 minutes;
4. provision of additional fire-resisting construction;
5. cables routed inside the building, not protected from direct exposure to fire shall comply with:
   (i) BS 6387 Category AWX or SWX; or
   (ii) BS EN 60702-1: 2002.

TB210.8.3 Main switchboard (identical to BS EN 10.8.3)

TB210.8.3.1 The main switchboard for the premises shall be situated in a fire compartment used for no other purpose than for electrical power supplies.

The electrical connections in the main switchboard shall be such that the supply to the pump controller is not isolated when isolating other services.

TB210.8.3.2 Each switch on the dedicated power feed to the sprinkler pump shall be labelled:

SPRINKLER PUMP MOTOR SUPPLY – NOT TO BE SWITCHED OFF
IN THE EVENT OF FIRE

The letters on the notice shall be at least 10mm high and shall be white on a red background. The switch shall be locked to protect it against tampering.

TB210.8.4 Installation between the main switchboard and the pump controller (identical to BS EN 10.8.4)

The current used for selecting the cable shall be not less than 150% of the largest possible full load current.

TB210.8.5 Pump controller (replaces BS EN 10.8.5)

TB210.8.5.1 The pump controller shall be:

(a) able to start the motor automatically on receiving a signal from the pressure switches;

(b) able to start the motor on manual actuation;

(c) able to stop the motor by manual actuation only; and

(d) equipped with an ammeter.

In the case of submersible pumps, the controller shall have a plate with its characteristics affixed to the pump controller.

TB210.8.5.2 Except in the case of submersible pumps, the pump controller shall be situated in the same compartment as the electric motor and pump.

TB210.8.5.3 Contacts shall comply with utilisation category AC-3 of EN 60947-1 and EN 60947-4.

TB210.8.6 Monitoring of pump operation (identical to BS EN 10.8.6)

TB210.8.6.1 The following conditions shall be monitored (see Annex I):

(a) power available to the motor and, where AC, on all three phases;

(b) pump on demand;

(c) pump running; and

(d) start failure.

TB210.8.6.2 All monitored conditions shall be visually indicated individually in the pump room. They shall also be visually indicated at a location permanently attended by responsible personnel. Pump running and fault alarms shall also be audibly indicated at the same place.

TB210.8.6.3 The visual fault indication shall be yellow. The audible signals shall have signal strength of at least 75dB and shall be able to be silenced.

TB210.8.6.4 A lamp test for checking the signal lamps shall be provided.

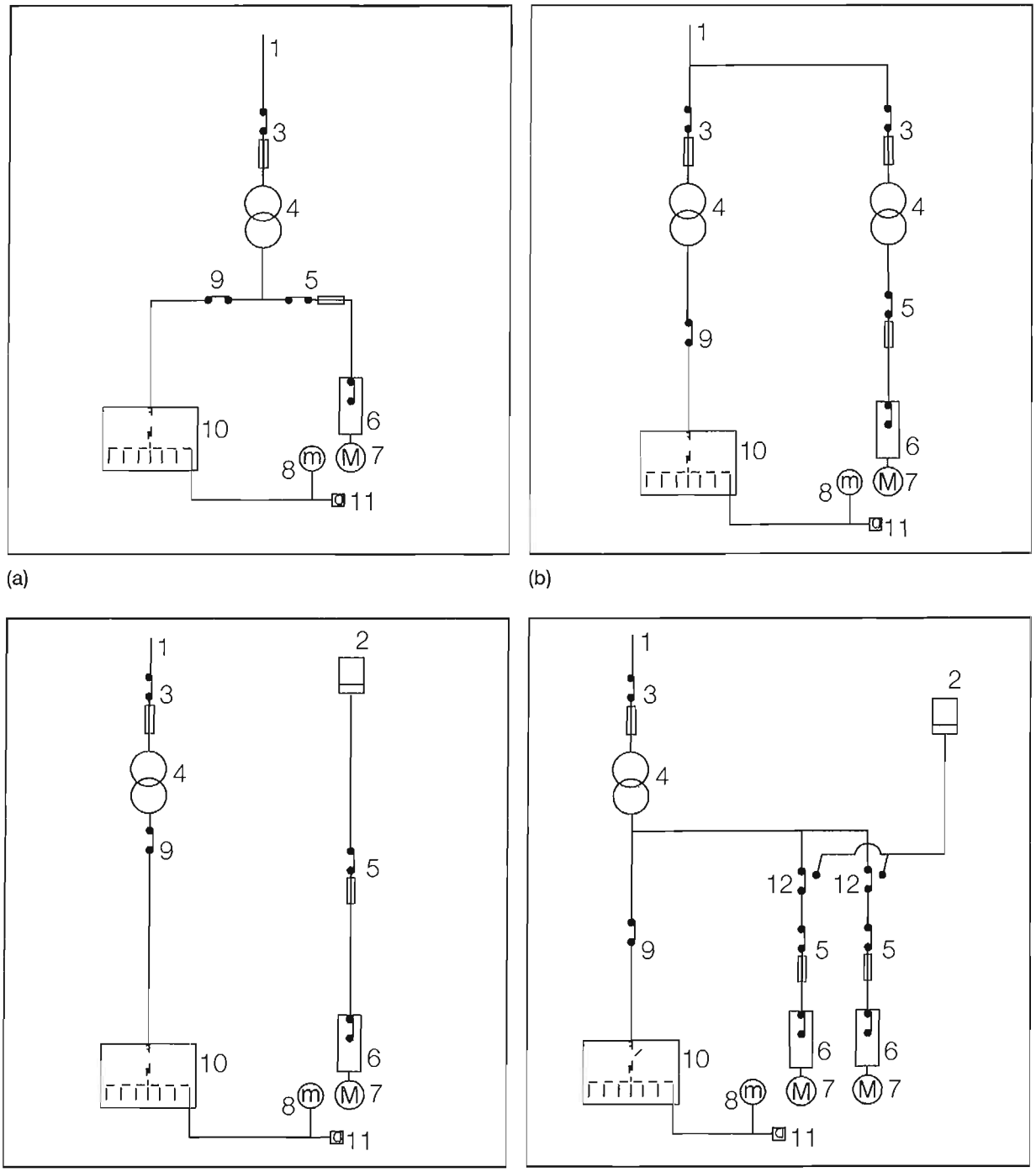

Key

1. Mains supply
2. Stand-by generator
3. Transformer isolation means and protection
4. Transformer
5. Sprinkler pump isolating protective device
6. Sprinkler pump controller
7. Main sprinkler pump motor
8. Sprinkler jockey pump motor
9. Main switch – for building services
10. Main distribution board – for building services
11. Sprinkler pump house ancillary equipment (eg lighting, fans, battery chargers etc)
12. Change-over switch

Figure TB210.F10 Typical power supplies for sprinkler pumps

TB210.9 DIESEL ENGINE DRIVEN PUMPSETS

TB210.9.1 General (replaces BS EN 10.9.1)

The diesel engine shall be capable of operating continuously at full load as specified in TB210.1 at site elevation for a period of 6 hours, with a rated continuous power output in accordance with ISO 3046.

At any time the pump shall be fully operational within 15s of the beginning of any starting sequence.

Horizontal pumps shall have a direct drive.

The automatic start and operation of the pumpset shall not depend on any energy sources other than the engine and its batteries.

TB210.9.2 Engines (replaces BS EN 10.9.2)

The engine shall:

(a) be of the injection type capable of starting at an engine room temperature of 4°C;

(b) be naturally aspirated, super-charged or turbo-charged;

(c) have a manually operated shut-down;

(d) be provided with a governor to control the engine speed to ±5% of its rated speed under normal load conditions, and be constructed so that any mechanical device fitted to the engine which could prevent the engine starting automatically, will return to the starting position; and

(e) be fitted with a device to measure running time and a tachometer.

TB210.9.3 Cooling system (replaces BS EN 10.9.3)

The cooling systems shall be one of the following types:

(a) cooling by water from the sprinkler pump directly into the engine-cylinder jackets, via a pressure reducing device if necessary, in accordance with the suppliers' specification. The outlet pipe shall be open so that the discharge water is visible;

(b) a heat exchanger, where the water is taken from the sprinkler pump, via a pressure reducing device if necessary, in accordance with the suppliers' specification. The outlet pipe shall be open so that the discharge water is visible. An auxiliary pump driven by the engine shall circulate the water in the closed circuit. If the auxiliary pump is belt driven, there shall be multiple belts such that even if up to half the belts are broken, the remaining belt(s) are able to drive the pump. The capacity of the closed circuit shall conform to the value specified by the engine supplier;

(c) an air cooled radiator with a fan driven by multiple belts from the engine. If half the belts should break, the remaining belts shall be capable of driving the fan. An auxiliary pump driven by the engine shall circulate the water in the closed circuit. If the auxiliary pump is belt driven, there shall be multiple belts such that even if half the belts are broken, the remaining belts are able to drive the pump. The capacity of the closed circuit shall conform to the value specified by the engine supplier; and

(d) direct air cooling of the engine by means of a multiple belt driven fan. When half the belts are broken the remaining belts shall be capable of driving the fan.

TB210.9.4 Air filtration (identical to BS EN 10.9.4)

The engine air intake shall be fitted with a suitable filter.

TB210.9.5 Exhaust system (replaces BS EN 10.9.5)

The exhaust pipe shall be fitted with a suitable silencer and the total back pressure shall not exceed the suppliers' recommendation.

Where the exhaust pipe is higher than the engine, means shall be provided to prevent any condensate flowing back to the engine. The exhaust pipe shall be positioned in such a way as to prevent exhaust gases from re-entering the pump room or adjacent properties. It shall be thermally insulated and installed so that it does not cause a fire ignition risk.

TB210.9.6 Fuel, fuel tank and fuel feed pipes (identical to BS EN 10.9.6)

The quality of the diesel fuel used shall conform to the suppliers' recommendations. The fuel tank shall contain sufficient fuel to enable the engine to run on full load for:

(a) 3 hours for LH;

(b) 4 hours for OH; and

(c) 6 hours for HHP and HHS.

The fuel tank shall be of welded steel. Where there is more than one engine, there shall be a separate fuel tank and fuel feed pipe for each one.

The fuel tank shall be fixed at a higher level than the motor's fuel pump to ensure a positive head, but not directly above the engine. The fuel tank shall have a sturdy fuel level gauge.

Any valves in the fuel feed pipe between the fuel tank and the engines shall be placed adjacent to the tank, have an indicator and be locked in the open position. Pipe joints shall not be soldered. Metallic pipes shall be used for fuel lines.

The feed pipe shall be situated at least 20mm above the bottom of the fuel tank. A drain valve of at least 20mm diameter shall be fitted to the base of the tank.

Provisions shall be made for the retention of any spilled fuel within the pump chamber.

Note: The fuel tank vent should be terminated outside the building.

COMMENTARY AND RECOMMENDATIONS ON TB210.9.6

Consideration shall be given to storage, handling and transfer of fuel within and external to the pump house. Where necessary, provision shall be made for safely storing spare fuel drums. Whilst fuel transfer takes place, fuel drums should be positioned in a bund of at least 110% of the total drum volume. A strategy should be in place detailing how any minor fuel spillages should be dealt with.

TB210.9.7 Starting mechanism

TB210.9.7.1 General (replaces BS EN 10.9.7.1)

Automatic and manual starting systems shall be provided and shall be independent except that the starter motor and batteries may be common to the two systems.

It shall be possible to start the diesel engine both automatically, upon receipt of a signal from the pressure switches, and manually by means of a push button on the pump controller. It shall be possible to shut down the diesel engine only manually. Engine monitoring devices shall not cause the engine to stop under any conditions.

The rated voltage of the batteries and starter motor shall be no less than 12V.

TB210.9.7.2 Automatic starting system (replaces BS EN 10.9.7.2)

The automatic starting sequence shall make six attempts to start the engine, each cranking attempt of at least 10s and no more than 15s duration, with a pause of not less than 10s and not more than 15s between each attempt. At the end of each cranking cycle, the design engine cranking speed shall not be less than 120r/m whilst power is applied. The starting device shall reset itself automatically. It shall function independently of the line power supply.

The system shall switch over automatically to the other battery after each starting attempt. The control voltage shall be drawn from both batteries simultaneously. Facilities shall be provided to prevent one battery having an adverse effect on the other.

An isolating switch, protected from unauthorised use by a key or special tool locked device, shall be provided at the pump control panel to isolate the automatic starting sequence of the diesel pump.

TB210.9.7.3 *Emergency manual starting system (identical to BS EN 10.9.7.3)*

Emergency manual start facilities, with starting power available from both batteries, shall be provided, with a hinged or frangible cover. Facilities shall be provided to prevent one battery having an adverse effect on the other.

TB210.9.7.4 *Test facility for manual starting system (identical to BS EN 10.9.7.4)*

A manual start test button and indicator lamp shall be provided to permit periodic testing of the manual electric start system without breaking the cover over the emergency manual start facilities button. The starter panel shall be marked, adjacent to the lamp, with the wording:

OPERATE MANUAL START TEST BUTTON IF LAMP IS LIT

The manual start test button shall only be brought on line after an automatic engine start, followed by a shut down, or after six repeated unsuccessful attempts to start automatically. Either of the two conditions shall cause the indicator lamp to light and bring the manual start test button on line drawing power only from the opposite battery to that which provided power for the last cranking attempt.

When a manual start test has been carried out, the circuit used for this purpose shall automatically become inoperable and the indicator lamp shall be extinguished. The automatic start facility shall be available, even when the manual start test button circuit is activated.

TB210.9.7.5 *Starter motor (identical to BS EN 10.9.7.5)*

The electric starter motor shall incorporate a moveable pinion, which engages automatically with the flywheel gear rim. To avoid shock loading, the system shall not apply full power to the starting motor until the pinion is fully engaged. The pinion shall not be ejected from engagement by spasmodic engine firing. There shall be a means to prevent attempted engagement when the engine is rotating.

The starter motor shall cease to operate and shall return to the rest position if the pinion fails to engage with the flywheel gear ring. After the first failure to engage, the starter motor shall automatically make up to five further attempts to achieve engagement.

When the engine starts, the starter motor pinion shall withdraw from the flywheel gear ring automatically by means of a speed sensor. Pressure switches – for example, on the engine lubrication system or water pump outlet – shall not be used as a means of de-energising the starter motor.

Speed sensors shall have a direct coupling to, or be gear-driven by, the engine. Flexible drives shall not be used.

TB210.9.8 Electric starter motor batteries (replaces BS EN 10.9.8)

Two separate battery power supplies shall be provided and shall be used for no other purpose. Batteries shall be either open nickel-cadmium prismatic rechargeable cells complying with EN 60623 or lead-acid Planté positive batteries complying with BS 6290-2.

The rated voltage of the batteries shall be at least 12V and shall be compatible with the starter motor.

The electrolyte for lead acid batteries shall comply with BS 3031.

Batteries shall be selected, used, charged and maintained in accordance with the requirements of this standard and with the suppliers' instructions.

A hydrometer, suitable for checking the density of the electrolyte, shall be provided.

Each battery power source shall have the design capacity to rotate the engine at 0°C and 760mm mercury atmospheric pressure for not less than ten cycles each of not less than 15s cranking and not more than 10s rest. At the end of each cranking cycle, the engine cranking speed shall not be less than 120r/m whilst power is applied.

TB210.9.9 Battery chargers (identical to BS EN 10.9.9)

Each starter battery shall be provided with an independent, continuously connected, fully automatic, constant potential charger, as specified by the supplier. It shall be possible to remove either charger while leaving the other operational.

Note 1: Chargers for lead acid batteries should provide a float voltage of (2,25 ± 0,05)V per cell. The nominal charging voltage should be suitable for local conditions (climate, regular maintenance, etc). A boost charge facility should be provided for charging to a higher voltage not exceeding 2,7V per cell. The charger output should be between 3,5% and 7,5% of the 10 hour capacity of the battery.

Note 2: Chargers for open nickel-cadmium prismatic batteries should provide a float voltage of (1,445 ± 0,025)V per cell. The nominal charging voltage should be suitable for local conditions (climate, regular maintenance, etc). A boost charge facility should be provided for charging to a higher voltage not exceeding 1,75V per cell. The charger output should be between 25% and 167% of the 5 hour capacity of the battery.

TB210.9.10 Siting of batteries and chargers (identical to BS EN 10.9.10)

Batteries shall be mounted on stands.

The chargers may be mounted with the batteries. Batteries and chargers shall be located in readily accessible positions where the likelihood of contamination by oil fuel, damp, pumpset cooling water, or of damage by vibration is minimal. The battery shall be as close as possible to the engine starter motor, subject to the above constraints, in order to minimise voltage drop between the battery and starter motor terminal.

TB210.9.11 Starter alarm indication (replaces BS EN 10.9.11)

The following conditions shall each be indicated both locally and at a responsibly manned location (see BS EN Annex I):

(a) the use of any switch which prevents the engine starting automatically;

(b) the failure of the engine to start after the six attempts;

(c) pump on demand;

(d) pump running; and

(e) diesel controller fault.

The warning lights shall be appropriately marked.

TB210.9.12 Tools and spare parts (identical to BS EN 10.9.12)

A standard kit of tools as recommended by the engine and pump suppliers shall be provided together with the following spare parts:

(a) two sets of fuel filter elements and seals;

(b) two sets of lubrication oil filter elements and seals;

(c) two sets of belts (where used);

(d) one complete set of engine joints, gaskets and hoses; and

(e) two injector nozzles.

TB210.9.13 Engine tests and exercising (identical to BS EN 10.9.13)

TB210.9.13.1 Suppliers' test and certification of results

Each complete engine and pumpset shall be tested by the supplier for no less than 1,5 hours at the rated flow. The following shall be recorded on the test certificate:

(a) the engine speed with the pump churning;

(b) the engine speed with the pump delivering water at the rated flow;

(c) the pump churning pressure;

(d) the suction head at the pump inlet;

(e) the pump outlet pressure at the rated flow downstream of any outlet orifice plate;

(f) the ambient temperature;

(g) the cooling water temperature rise at the end of the 1,5 hours run;

(h) the cooling water flow rate;

(i) the lubrication oil temperature rise at the end of the test run;

(j) where the engine is fitted with a heat exchanger, the initial temperature and the temperature rise of the engine closed circuit cooling water.

TB210.10 JOCKEY PUMPS

TB210.10.1 General

Jockey pump operation shall be free of hunting and shall not cause water hammer.

TB210.10.2 Sprinkler pumps operating under positive head conditions

Where sprinkler pumps operate under positive head conditions, jockey pumps installed to maintain pressure in the trunk main may draw from the suction pipe. Suitable isolating stop valves and unions shall be fitted to allow for removal of the jockey pump without the need to drain down the installation, see Figure TB210.F11.

Where two or more sprinkler pumps are employed, a separate jockey pump feed connection with stop valve shall be provided from each suction pipe to avoid isolation of the jockey pump when a main sprinkler pump is isolated for maintenance.

TB210.10.3 Sprinkler pumps operating under suction lift conditions

Where sprinkler pumps operate under suction lift conditions, jockey pumps installed to maintain pressure in the trunk main shall draw from an independent water supply.

COMMENTARY AND RECOMMENDATIONS ON TB210.10

Where necessary, measures should be taken to prevent hunting and water hammer resulting from jockey pump operation, preferably by replacing the jockey pump with one with more appropriate characteristics or by restricting the flow from the jockey pump by inserting a suitable orifice plate downstream of the jockey pump outlet.

A water storage tank of at least 200ℓ capacity with an automatic inflow facility is considered an independent water supply for jockey pumps, providing water is not drawn from the suction pipe or main pump priming facility.

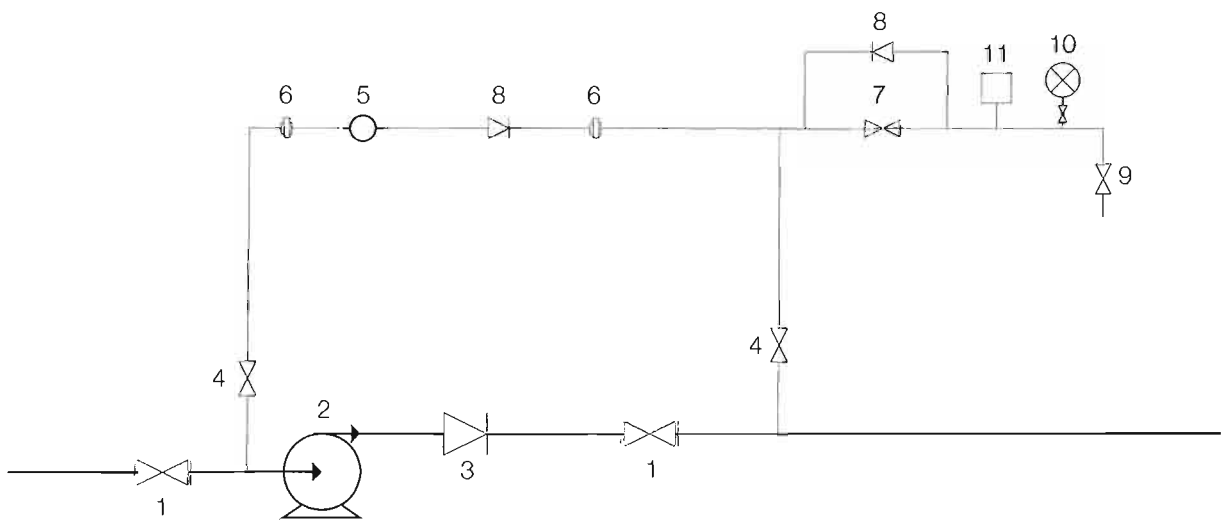

Key

1. Stop valve
2. Main pump
3. Pump delivery check valve
4. Isolating stop valve
5. Jockey pump
6. Unions
7. Stop valve (normally open)
8. Check valve
9. Drain valve
10. Pressure gauge
11. Pressure switch – jockey pump

Figure TB210.F11 Typical jockey pump arrangement for pumps operating under positive suction head

TB210.11 COMMISSIONING (SUPPLEMENTS BS EN CLAUSE 19)

The pumpset shall be commissioned by a suitably qualified and experienced commissioning engineer who shall ensure that:

(a) the delivery and suction pipework is correctly supported and is not stressing the pump casings;

(b) the pump and driver are correctly aligned;

(c) the pumpset has been correctly lubricated;

(d) any batteries are correctly installed, connected, charged and serviced;

(e) all pumpset equipment functions correctly;

(f) the pumpset is ready for service;

(g) flow tests have been carried out to verify that the pump generated head characteristics have been achieved.

COMMENTARY AND RECOMMENDATIONS ON TB210.11

If appropriate, the commissioning engineer should issue a certificate notifying that the pumpset has been satisfactorily commissioned and is available for service.

TB210.12 PROVING TESTS (AMENDS BS EN CLAUSE 10.9.13.2 AND SUPPLEMENTS BS EN CLAUSE 19)

Proving tests shall be carried out to establish that:

(a) pressure/flow tests at various flows up to at least the flows in Table TB210.T5 or in the case of fully hydraulically calculated systems, 1,1 x maximum demand flow to establish that the design criteria can be met for both normal and low water level conditions;

(b) the diesel engine cooling system (as specified in TB210.9.3) is effective when tested at the maximum system design flow rate for a period of 30 minutes;

(c) the minimum water flow pump by-pass system is effective, when tested under pump churning conditions for a period of 15 minutes;

(d) automatic starting devices for all pumps initiate the starting process, when the pressure in the trunk main in accordance with TB210.9.7.2;

(e) the repeat attempt start facility on any diesel driven pump controller functions correctly. The automatic starting system of the diesel engine shall be activated with the fuel supply isolated for the six cycles, each cranking attempt shall be of at least 10s and not more than 15s duration, with a pause of not less than 10s and not more than 15s between each attempt. After completion of the six starting cycles the fail to start alarm shall operate. The fuel supply shall than be restored and the engine shall start when the manual start test button is operated;

(f) the manual start facility functions correctly; and

(g) all relevant alarm functions are correctly indicated on the remote pump alarm panel.

COMMENTARY AND RECOMMENDATIONS ON TB210.12

Proving tests shall be carried out by the sprinkler installer to demonstrate to the client and any appropriate authority that:

(a) the pumpset and plant has been correctly installed and commissioned;

(b) monitoring and control equipment is correct and in working order;

(c) the water supply complies with the approved design requirements.

Performance characteristics at low water levels may be extrapolated from pressure and flow test results undertaken at a higher water level such as the normal water level.

TB210.13 PUBLICATIONS REFERRED TO

- *FPA Guide on working in confined spaces.*
- BS 3031: *Specification for sulfuric acid used in lead-acid batteries.*
- BS 5154: *Specification for copper alloy globe, globe stop and check, check and gate valves.*
- BS 6290-2: *Lead-acid stationary cells and batteries. Specification for the high-performance Planté positive type.*
- BS 6387: *Specification for performance requirements for cables required to maintain circuit integrity under fire conditions.*
- BS 7671: *Requirements for electrical installations. IEE Wiring Regulations. Seventeenth edition.*
- BS EN 837-1: *Pressure gauges. Bourdon tube pressure gauges. Dimensions, metrology, requirements and testing.*
- BS EN 837-2: *Pressure gauges. Selection and installation recommendations for pressure gauges.*
- BS EN 1171: *Industrial valves. Cast iron gate valves.*
- BS EN 1984: *Industrial valves. Steel gate valves.*
- BS EN 12288: *Industrial valves. Copper alloy gate valves.*
- BS EN 60623: *Secondary cells and batteries containing alkaline or other non-acid electrolytes. Vented nickel-cadmium prismatic rechargeable single cells.*
- BS EN 60947-1: *Low-voltage switchgear and controlgear. General rules*
- BS EN 60947-4: *Low-voltage switchgear and controlgear. Contactors and motor starters*
- BS ISO 3046-1: *Reciprocating internal combustion engines. Performance. Declarations of power, fuel and lubricating oil consumptions, and test methods. Additional requirements for engines for general use.*
- BS EN 60702-1: *Mineral insulated cables and their terminations with a rated voltage not exceeding 750V. Cables.*
- EN 12259-5: *Components for sprinkler and water spray systems. Water flow detectors.*
- prEN 12259-12: *Fixed firefighting systems. Components for sprinkler and water spray systems. Pumps.*
- EN 12723: *Liquid pumps. General terms for pumps and installations. Definitions, quantities, letter symbols and units.*

CPVC plastic pipe

TB211 has been replaced by TB227

Specifications for pipes and fittings

TB212 has been replaced by TB227

Upkeep and testing of multiple controls

Relates to TB203.3.4.5

TB213.1 BACKGROUND

Multiple controls comprise sliding valve components (see Figure TB213.F1) which make them susceptible to build-up of corrosion, paint and environmental deposits. In addition, continued leakage or wetting over a period of time can result in the build-up of salt deposits which may render the device unserviceable or slow to operate.

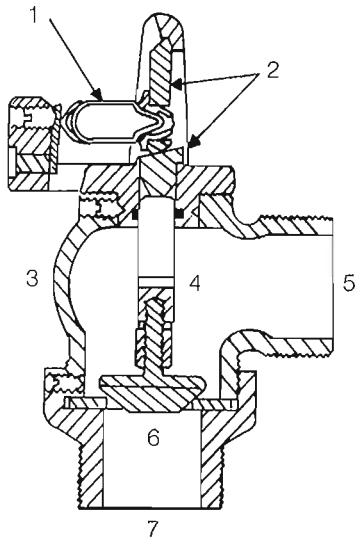

1. Heat sensitive element
2. Linkage assembly
3. Body
4. Valve stem
5. Outlet
6. Valve head
7. Inlet

Figure TB213.F1 Section of typical multiple control

TB213.2 EXAMINATION

All installed multiple controls shall be examined in accordance with the installers' and/or manufacturers' instruction manual.

COMMENTARY AND RECOMMENDATIONS ON TB213.2

(i) Servicing

It is recommended that a service contract be placed with the installing contractor for the examination and testing of installed multiple controls.

(ii) Examination

Examination of the sprinkler system should take place annually and should include a close inspection of multiple controls for signs of leakage, deposits or build-up of salts, corrosion, contaminates, paint and mechanical damage. In particular, the multiple controls' heat sensitive elements, their linkages and valve stem should be inspected. If multiple controls exhibit unacceptable signs of degradation they should be:

(a) replaced; or

(b) overhauled by the manufacturer; or

(c) subject to the periodic testing procedure (see TB213.3).

(iii) Notification

The leading fire insurers should be informed of suspected or confirmed multiple control serviceability problems.

TB213.3 PERIODIC TESTING PROCEDURE

Representative samples of the oldest or 'worst condition' multiple controls shall be removed at regular intervals for functional testing. Any failures to operate satisfactorily shall result in:

(i) replacement of all comparable multiple controls, or;

(ii) overhaul by the manufacturer of all comparable multiple controls, or;

(iii) testing of an increased sample size to establish whether replacement is essential.

COMMENTARY AND RECOMMENDATIONS ON TB213.3

(i) **Sample size**

Representative sample size should be at least 6%, or three multiple controls (whichever is the greater) of each batch of multiple controls installed on site.

(ii) **Frequency of testing**

The frequency of periodic testing is dependent upon the type of use, nature of risk and conditions to which the multiple controls have been subjected.

Sprinkler protection of flammable liquid stores

Relates to BS EN Annex G.4

TB214.1 SCOPE

This Technical Bulletin describes special provisions for the protection of storage of flammable liquids in non-pressurised metal drums which have been identified as a special hazard in Annex A, 'Special hazards', of Technical Bulletin TB217: *Categorisation of goods in storage*.

This Technical Bulletin should be read and applied in conjunction with Technical Bulletin TB217 and *RISCAuthority Recommendations for fire safety in the storage and use of flammable liquids*, RC20 Part 1, RC20 Part 2 and RC57.

TB214.2 PROTECTION CRITERIA

TB214.2.1 Storage arrangements

Flammable liquids shall be divided into four classes according to their flash point (FP) and boiling point (BP), as shown in BS EN Table G.2, BS EN Table G.3 and BS EN Table G.4. BS EN Table G.2 and BS EN Table G.3 shall be used for flammable liquids stored in non-pressurised metal drums with a capacity greater than 20ℓ but less than 208ℓ. BS EN Table G.4 shall be used for flammable liquids stored in non-pressurised metal drums with a capacity less than 20ℓ.

All ceiling sprinklers protecting areas of flammable liquids shall have a nominal operating temperature of 141°C and all in-rack sprinklers shall have a nominal operating temperature of 68°C.

TB214.2.2 Choice of installation

Sprinkler systems should preferably be of the wet-pipe type. Where dry-pipe installations are required only pre-action type 2 systems shall be used.

The area of coverage for pre-action system detectors shall be not more than 9,0m^2. The maximum distance between detectors shall be no more than 3m.

Use of pre-action systems shall be limited to compartments with a floor area not exceeding 450m^2.

> COMMENTARY AND RECOMMENDATIONS ON TB214.2.2
>
> In unheated buildings, type 2 pre-action or deluge systems may be used.

BS EN Tables G.2, G.3 and G.4 are reproduced below for the convenience of the user.

BS EN Table G.2 Flammable liquids in metal drums (ST1) with a capacity >20ℓ and ≤208ℓ					
Class	Properties °C	Drum orientation	Permitted storage	Ceiling sprinklers	
				Density mm/min	AMAO m²
1	FP ≥100	On side	≤12 drums high	10	450
		On end	≤6 drums high		
2	FP <100	On side	≤6 drums high	25	450
		On end	≤2 drums high		
3	FP <35	On side	≤3 drums high	25	450
		On end	1 drum high		
4	FP <21 and BP <35	On side or on end	1 drum high	25	450

BS EN Table G.3 Flammable liquids in metal drums (ST4) with a capacity >20ℓ and ≤208ℓ					
Class	Properties °C	Drum orientation(1)	Intermediate sprinkler levels	Ceiling sprinklers	
				Density mm/min	AMAO m²
1	FP ≥100	On side	each 12th tier	10	450
		On end	each 6th tier	10	
2	FP <100	On side	each 6th tier	25	450
		On end	each tier	10	
3	FP <35	On side	each 3rd tier	25	450
		On end	each tier	10	
4	FP ≤21 and BP ≤35	On side or on end	each tier	25	450
Note: Drums shall be stored at a height of one drum per tier.					

BS EN Table G.4 Flammable liquids in metal drums (ST1, ST5, ST6) with a capacity >20ℓ					
Class	Properties °C	Type of storage	Maximum storage height	Ceiling sprinklers	
				Density mm/min	Assumed m²
1	FP ≥100	ST1	5,5	10	450
		ST5/ST6	4,6	7.5	
2	FP <100	ST1	4,0	12,5	450
		ST5/ST6	4,6		
3	FP <35	ST1	1,5	12,5	450
4	FP <21 and BP <35	ST5 / ST6	2,1		

TB214.2.3 In-rack sprinklers

TB214.2.3.1 Number of heads in simultaneous operation

Sprinklers located in-racks should be designed in accordance with the requirements for category IV goods. The requirements of BS EN Clause 7.2.3.3 shall be applied.

TB214.2.3.2 Minimum flow pressure

The flow pressure at the hydraulically most unfavourably situated rack sprinkler when the number of rack sprinklers as specified in BS EN Clause 7.2.3.3 and the specified assumed area of operation of roof or ceiling sprinklers are operating simultaneously shall be not less than 2bar.

TB214.2.3.3 *Foam additive*

A suitable firefighting foam compound may be added to the sprinkler water.

COMMENTARY AND RECOMMENDATIONS ON TB214.2.3.3

Aqueous film-forming foam (AFFF) should be added to the sprinkler water in accordance with the manufacturers' recommendations. The duration of supply of AFFF should not be less than 10 minutes for a flow equivalent to 0,5 Q_{max}.

TB214.2.3.4 *The control of fire-water run-off*

Consideration should be given to the control of fire-water run-off where the release of such water may result in damage to the environment. An assessment of the possible environmental impact of a fire should be carried out and the relevant authorities consulted.

COMMENTARY AND RECOMMENDATIONS ON TB214.2.3.4

A well-designed sprinkler system can reduce the amount of water which needs to be applied to control/extinguish a fire, thus reducing possible environmental impacts. Further guidance and recommendations on environmental hazard assessment and design of containment systems may be found in the publications listed in TB214.3.

TB214.3 PUBLICATIONS REFERRED TO

- RC20 Part 1: *Recommendations for fire safety in the storage and use of highly flammable and flammable liquids. General principles*, 2006.
- RC20 Part 2: *Recommendations for fire safety in the storage and use of highly flammable and flammable liquids. Storage in drums, cans and containers other than external fixed tanks*, 2007.
- RC57: *Storage and use of highly flammable and flammable liquids in external fixed tanks*, 2009.
- HSE Guidance Note EH70, *The control of fire-water run-off from CIMAH sites to prevent environmental damage*, 1995.
- LPC document CEA1, *Fire Protection of Stores Containing Hazardous Substances*, 1997.
- LPC document CEA2, *Classification of materials and goods*, 1996.

Sprinkler protection of idle pallet storage

Replaces BS EN Annex G.5 and relates to BS EN Clauses 6.1, 6.2.2, 6.2.3, and Technical Bulletin TB217: Categorisation of goods in storage

TB215.1 SCOPE

This Technical Bulletin describes special provisions for the protection of all idle pallet storages which have been identified as a special hazard in Annex G, 'Protection of special hazards' of BS EN 12845 and in Annex A, 'Special Hazards' of Technical Bulletin TB217: *Categorisation of goods in storage*.

This Technical Bulletin should be read and applied in conjunction with TB217.

TB215.2 CLASSIFICATION OF PALLETS

Pallets shall be classified:

Class I: wood or cellulose pallets, and unexpanded high density polyethylene pallets with solid decks;

Class II: all other plastic pallets.

TB215.3 PROTECTION CRITERIA

TB215.3.1 Type of system

Sprinkler systems protecting idle pallet storage shall be of the wet pipe type only.

TB215.3.2 Storage arrangements

Idle pallets stored in solid piles or on pallets should be protected with ceiling sprinklers according to Table TB215.T1. Pallets stored on racks should be protected with ceiling plus in-rack sprinklers in accordance with Table TB215.T2. All tier heights shall not exceed 1,8m.

Table TB215.T1 Protection of solid piled or palletised pallets with spray or conventional sprinklers

Pallet class	Maximum height of storage m	Ceiling sprinklers			Special requirements
		Density mm/min	AMAO m²	Temperature rating	
I	3,8	25	300	As BS EN Clause 14.4	
I	4,4	30	300	93°C or 100°C	Storage in 60min fire resistant compartment
II	3,3	25	300	As BS EN Clause 14.4	Storage in 60min fire resistant compartment

Table TB215.T2 Protection of rack storage of pallets with conventional or spray sprinklers					
Pallet class	In-rack sprinklers m	Ceiling sprinklers			Special requirements
		Density mm/min	AMAO m²	Temperature rating	
I	As for category IV, ST4 storage, see BS EN Clause 12.5	As for category IV (see BS EN Table 4)	As for category IV (see BS EN Table 4)	93°C or 100°C	60min fire resistant compartment when storage height >3.8m
II	As for category IV, including one level of in-rack sprinklers above top level of storage with k=115 and minimum operating pressure of 3bar	25	300	As BS EN Clause 14.4	Storage in 60min fire resistant compartment

TB215.4 ESFR PROTECTION OF IDLE PALLET STORAGE

TB215.4.1 Application of TB209 to Idle pallet storage

All the appropriate requirements of TB209: *ESFR sprinkler protection*, shall be applied in full to ESFR sprinkler protection of idle pallet storage.

TB215.4.2 ESFR storage arrangements

ESFR sprinkler protection of both classes of idle pallet storage shall satisfy all of the following criteria:

- 7,5m maximum storage height;
- 9,0m maximum ceiling height;
- AMNOSO of 12 sprinklers; and
- sprinkler operating pressure of 3,5bar.

Sprinkler protection of aerosols

Supplements BS EN Annex G.2 and relates to BS EN Clauses 6.1, 6.2.2, 6.2.3 and RISCAuthority RC19: Recommendations for the storage of aerosol products

TB216.1 SCOPE

This Technical Bulletin describes special provisions for the protection of aerosol storages which have been identified as a special hazard in BS EN 12845, Annex G.2 'Aerosols'. This Technical Bulletin should be read and applied in conjunction with RISCAuthority RC19: *Recommendations for the storage of aerosol products*.

TB216.2 DEFINITIONS

TB216.2.1 Aerosol

A non-reusable container or dispenser made of metal (having a capacity of 1000ml or less), glass or plastic (having a capacity of less than 220ml or less), containing a gas which is compressed, liquefied or dissolved under pressure, with a liquid paste or powder and fitted with a release device allowing the contents to be expelled as solid or liquid particles in suspension in a gas, as a foam, paste or powder, or in a liquid state.

TB216.2.2 Aerosol cap

A device fitted to an aerosol dispenser to release its contents.

TB216.2.3 Base product

The contents of the aerosol container other than the propellant.

TB216.3 GENERAL

For the purpose of this Technical Bulletin the term 'aerosol' will refer to the aerosol dispenser, cap and its contents.

A fire in aerosol storage is a particular challenge to sprinkler protection. Under fire conditions, failures of aerosols may occur due to an increase in internal container pressure caused by heating. Failure of an aerosol container will suddenly release the contents which may result in a fireball, explosion or jet flame. The aerosol container or aerosol parts may be forcibly ejected. Tests have shown that under fire conditions rocketing aerosol containers can travel distances of the order of 30m; aerosol caps can travel 20m while ignited and are secondary ignition sources.

An aerosol will be deemed to have flammable contents if it contains either:

(a) more than 45% by weight of flammable substances; or

(b) more than 250g of flammable substances.

For the purposes of this Technical Bulletin, 'flammable substances' means highly flammable gases or flammable liquids having flash points equal to or less than 100°C.

COMMENTARY AND RECOMMENDATIONS ON TB216.3

Detailed precautions to prevent the transmission of fire by burning aerosols are given in this Technical Bulletin. The protection criteria described assume these precautions will be taken.

Further details on the classification and marking of aerosols can be found in the Chemicals (Hazard Information and Packaging for Supply) Regulations 2002, sometimes referred to as CHIP3.

TB216.4 AEROSOL STORAGE

TB216.4.1 Segregation

Where appropriate, aerosols with flammable contents shall be segregated from other stock, preferably in another building or fire-resisting enclosure complying with TB206.4.1.1 and Table 206.T1, row 7a. Where buildings or fire resisting enclosures in which aerosols are stored have floor areas exceeding 260m², aerosols should be enclosed within steel mesh cages or bins.

Each cage or bin shall not exceed 125m² in plan area and shall have self-closing doors. The steel mesh size shall be appropriate for the stored aerosols but should not exceed a mesh size of 25mm by 25mm, with a steel section of not less than 2mm thick.

Other than aerosol packaging, containers or pallets on which they are stored, no combustible materials should be stored inside any protective cage or bin. There shall be clear spaces between adjacent cages and between cages and other combustible stock of at least 2,5m.

COMMENTARY AND RECOMMENDATIONS ON TB216.4.1

Consideration should also be given to the provision of solid barriers or partitions within racking systems to restrain rocketing aerosols should a fire occur. Where appropriate barriers are provided, it may be possible to reduce the clear space requirement between storage areas.

TB216.4.2 Storage environment and ventilation

Aerosols shall be stored in a cool, dry, ventilated area free from the risk of temperature extremes. All aerosols shall be stored within their suppliers' specified temperature limits. Aerosols shall not be stored in areas where gas or vapours can accumulate, such as basements or bunded or sunken areas.

Where mechanical ventilation is employed, it should provide at least 6 air changes per hour. Ventilation inlets and extracts should be positioned such that a cross flow is created through the stored area, with the inlet at high level and the extract at low level. Ventilation ductwork and components should be selected and designed to mitigate the spread of fire and should be appropriate to the hazard.

All ventilation openings should be kept free of obstructions.

COMMENTARY AND RECOMMENDATIONS ON TB216.4.2

Where aerosol storage is reliant on natural ventilation, high and low level openings to atmosphere should be provided comprising at least 2,5% of the combined area of the walls and roof or ceiling.

TB216.4.3 Movement of aerosols within the sprinklered building

Movement of significant quantities of aerosols with flammable contents within a sprinklered building where there is no segregation as described in TB216.4.1 may result in the sprinkler protection failing to control should a fire involve the aerosols. Measures shall be taken to move aerosols safely.

COMMENTARY AND RECOMMENDATIONS ON TB216.4.3

Where pallets of flammable aerosols are moved within a sprinklered building outside segregated areas, the pallets of aerosols should be contained within a cage suitable for the transportation of single pallets.

TB216.5 SPRINKLER PROTECTION

TB216.5.1 General

TB 216.5.1.1 Installation type

Sprinkler installations shall be of the wet pipe type.

TB216.5.1.2 Storage methods

The advice in this Technical Bulletin is limited to aerosols stored in free-standing or block stacking (ST1 type storage) or beam pallet/palletised racking (ST4 type storage). The protection specified is not appropriate for aerosols stored on plastic pallets.

TB216.5.1.3 Aerosol content classification

Aerosol contents shall be classified according to the base product stored in the aerosol and not the propellant used.

Two types of hazardous aerosol are:

- alcohol based: typically, hair spray, antiseptics, and anaesthetics; and
- hydrocarbon based: typically, paints, lubricants and oil-based anti-perspirants.

TB216.5.2 Sprinkler protection of aerosol storages other than ESFR sprinklers

TB 216.5.2.1 Sprinkler selection

Sprinkler selection shall comply with Table TB216.T1.

Table TB216.T1. Sprinkler selection

Location	Sprinkler pattern	k factor
Ceiling or roof protection	Conventional and spray	115
	k160	160
In-rack protection	Conventional and spray	115

TB216.5.2.2 Design requirements

Protection of aerosol storage shall be in accordance with Table TB216.T2.

Table TB216.T2. Sprinkler protection criteria for aerosol storage (other than ESFR)

Storage type	Maximum storage or tier height m		Ceiling sprinkler temperature rating °C	Ceiling sprinkler design density mm/min	Area of operation m²
	alcohol based	hydrocarbon based			
ST1	≤ 1,5		141	12,5	260
		≤ 1,5	141	25,0	300
ST4	Tiers ≤ 1,8		141	12,5(1)	260
		Tiers ≤ 1,8	141	25,0(1)	300

Note 1: Plus in-rack sprinklers.

TB216.5.2.3 *In-rack sprinkler protection*

Where in-rack sprinklers are used, they shall be installed at every tier of storage at a maximum horizontal spacing of 1,4m between sprinklers. There shall be a minimum clearance of 150mm between the sprinkler deflector and the storage immediately below.

In-rack sprinklers shall be selected in accordance with Table TB216.T1. In-rack sprinkler protection shall otherwise comply with the requirements for category IV storage; see BS EN Clauses 7.2.3.3, 12.5 and 13.4.4.

TB216.5.3 ESFR sprinkler protection of aerosol storages

TB216.5.3.1 *Compliance*

Except where otherwise specified in this Technical Bulletin, ESFR protection shall comply with TB209: *ESFR sprinkler protection*.

TB216.5.3.2 *Ceiling slope*

The ceiling slope shall not exceed 5° (90mm/m).

COMMENTARY AND RECOMMENDATIONS ON TB216.5.3.2

Where the ceiling slope is excessive, corrective action, in accordance with TB209.9.2, may be applied.

TB216.5.3.3 *ESFR sprinkler selection*

ESFR sprinklers with a k factor of 200 may be used in accordance with design requirements of Table TB216.T3 for free-standing or block stacking (ST1 type storage) and beam pallet/palletised racking (ST4 type storage). Other ESFR sprinklers may be used, providing their performance is proven by full-scale fire testing and the sprinklers are used in accordance with the suppliers' data sheet, on condition that the scope of the full-scale fire testing is not exceeded.

TB216.5.3.4 *ESFR design requirements*

ESFR protection for aerosol storage shall be in accordance with Table TB216.T3.

Table TB216.T3 Protection of aerosol storage using k200 ESFR sprinklers

Aerosol packaging materials[1]	Aerosol based product[2] storage height m		Maximum ceiling height[3] m	AMNOSO[4]	Sprinkler minimum operating pressure bar
	Alcohol	Hydrocarbon			
Cardboard cartons	6	–	7,6	12	3,5
	4,6	–	9	12	3,5
	–	4,6	7,6	12	3,5
	–	4,6	9	12	5,2
Plastic film encapsulation	4,6	–	9	12	3,5
	–	4,6	9	12	5,2

Note 1: The packaging materials referred to are those which enclose the aerosols. Where either the packs of aerosols or the pallets are encapsulated in plastic film, the values for 'plastic film encapsulation' shall be applied.
Note 2: The aerosol content is the base material referred to in clause TB216.5.1.3.
Note 3: The maximum ceiling height shall be taken as the vertical distance measured from the floor to the underside of the ceiling.
Note 4: AMNOSO = Assumed maximum number of sprinklers operating.

COMMENTARY AND RECOMMENDATIONS ON TB216.5.3.4

Where ESFR sprinklers with a k-factor other than 200 are used, based on the results of full-scale fire tests, full details of the full-scale tests should be made available to the insurer and any authority having jurisdiction, if requested.

TB216.5.3.5 *Measures required to correct excessive roof or ceiling height for aerosol storage*

Where the roof or ceiling height exceeds the values in Tables TB216.T2 and TB216.T3 a false ceiling may be constructed to achieve the correct height. The false ceiling should be of non-combustible construction and extend at least 3m beyond the storage with a smoke curtain of 600mm depth at the perimeter.

TB216.6 PUBLICATION REFERRED TO

- RC19: *Recommendations for the storage of aerosol products*, Fire Protection Association/RISCAuthority, 2004.

Categorisation of goods in storage

Relates to BS EN Clause 6 and Annexes B and C

TB217.1 SCOPE

This Technical Bulletin provides a list of categories for stored goods to enable the appropriate design specification to be applied when designing a sprinkler system using the *LPC Rules for automatic sprinkler installations.* It also includes a method for determining the category of goods where they may include plastics.

TB217.2 GENERAL

Users of these rules may still find that the product or the combination of materials they are considering is not included in the list or applicable to the categorising method, in which case, the leading insurer and/or the authority having jurisdiction should be consulted. In some circumstances, it may be necessary to undertake full-scale fire testing of the commodity, in the appropriate storage configuration, to determine a suitable standard of sprinkler protection. A number of fire test facilities exist which are suitable for determining the burning characteristics of goods and the level of sprinkler protection required for fire control or suppression purposes.

TB217.3 CATEGORISATION OF GOODS IN STORAGES

Goods in storages shall be categorised as Category I, II, III or IV. (BS EN Clauses 6.2.2 and 6.2.3 refer.)

COMMENTARY AND RECOMMENDATIONS ON TB217.3

Considerable care should be taken when determining goods categories, as this determines the design of sprinkler protection. The composition of commodities and other variables, which have a bearing on the nature and severity of storage fires, are discussed below:

(a) GOODS

Combinations of goods

Goods storages rarely consist of a single commodity, product or material, although there are exceptions such as rolled paper and timber stores. The majority of storages usually contain a mixture of goods and materials in a variety of packages, packing materials and an assortment of load carriers.

When determining a suitable category for sprinkler protection purposes, users should consider the most demanding combinations of goods, packaging and storage method in the sprinklered building, even if these commodities only form a small proportion of the total storage. Packaging materials may constitute a major proportion of the potential fire load and present a more serious challenge to the sprinkler protection than the goods they contain.

Combinations of materials and commodities can have unexpected effects. Fire tests have demonstrated that heavy-weight empty cardboard boxes stored free-standing justified a Category III rating, due to the stability of the stack under fire conditions and the rapid rate of heat release by the empty boxes. Identical cardboard boxes filled with spirituous liquor in glass bottles, stacked in an identical manner to the empty boxes, resulted in a slower rate of fire spread, which was readily suppressed and warranted no more than a Category II rating. The bottles in the boxes provided a substantial heat sink and created an effective barrier to fire transmission through the box interior. Although bottles in the fire region fractured at the neck, the bottled alcohol only made a significant contribution to the fire as and when bottles in the burning face fell and released their contents on impact with the floor.

Plastics

This issue of the Technical Bulletin now includes a categorisation methodology (see Annex B) to determine the category of the goods in storage where they contain plastics. The categorisation methodology should be used in most instances where goods are contained within plastics packaging, or where plastics are used in the construction of the goods.

The use of plastic-film dust covers, shrink or stretch-wrapping on goods should be considered when categorising goods. When dry, plastic-film may enhance the rate of fire development and increase the rate of heat output from the fire in the initial stages. Plastic-film coverings may also reduce the amount of sprinkler water absorbed by goods surrounding the fire site. Plastic-film covering will not, however, afford any prolonged protection from water discharge on to goods that are directly involved in the fire.

Plastic pallets and similar storage systems

Plastic pallets and similar storage systems should be carefully assessed before introduction into a sprinklered building. The risk assessment should include a review of the sprinkler system design to determine that an appropriate level of protection will be available. Many plastic storage products, including pallets, are manufactured from high density polyethylene (HDPE) or polypropylene. Depending on the pallet design, it may be possible to ignite and sustain burning with a relatively small energy source such as a single match. Once alight one light weight plastic pallet may be capable of generating a peak heat release rate in excess of 1,5MW depending on the design and mass of material. Stacking configurations may exacerbate fire growth in storage systems using plastic pallets. Burning pools of molten plastic will also result, which may also accelerate fire transmission, particularly on sloping floors. Idle plastic pallet storage also represents a significant fire threat within a sprinklered building; design and separation requirements are given in TB215.

Aerosol products

Aerosol containers present a special hazard within sprinkler protected buildings. The flammability of aerosols varies, depending on their contents, but all types of pressurised aerosol container could be responsible for the transmission of fire within a storage by burning projectiles.

Storages containing aerosols should be treated as a special case and the requirements of Technical Bulletin TB216: *Sprinkler protection of aerosols*, should be complied with. The fire insurer should be consulted concerning the standard of protection required.

An aerosol dispenser is defined as 'a non-reusable container made of metal, glass or plastic containing a gas compressed, liquefied or dissolved under pressure, with or without a liquid, paste or powder, and fitted with a release device allowing the contents to be expelled as solid or liquid particles in suspension in a gas, as a foam, paste or powder, or in a liquid state.'

For the purpose of this document the term 'aerosol' will refer to an aerosol dispenser and its contents.

Aerosols having a container made of metal shall have a capacity of 1000ml or less and if made of glass or plastic 220ml or less.

In Europe, aerosols should be identified and marked as flammable if the contents include more than 45% by weight, or more than 250g of flammable components. This differs from the US classification which designates three levels of classification, Level 3 and some of the Level 2 products being equivalent to the European flammable aerosol classification.

Mechanical damage of a pallet or box containing aerosol products, leading to a release of contents, may result in a fire if there is an ignition source present. Once aerosols become involved in a fire the containers are likely to fail due to the effects of increasing external temperature and the resulting increasing internal pressure or due to degradation of the valve closure. Any container failure is likely to result in the container or adjacent containers being expelled forcibly from the fire site. If the aerosol containers are not restrained, container travel distances of 30m and more can be expected. In experiments undertaken by the Loss Prevention Council, some of the

the aerosol plastic valve components continued to burn during and after flight, landing over 20m from the fire site. The flammable contents of aerosols may also continue to be expelled and burn during flight.

Flammable liquids

Fires involving flammable liquids may in some instances be controlled or suppressed by the operation of a standard sprinkler installation. The requirements of Technical Bulletin TB214: *Sprinkler protection of flammable liquid stores*, should be met.

Ideally, flammable liquids should be kept in purpose-built stores of limited size, which should not contain other goods. Suitable arrangements should be made for drainage and containment of any flammable liquids and water used for fire-fighting purposes. These measures are particularly important with non-water miscible flammable liquids which may result in running-liquid fires (see also RISCAuthority *Recommendations for fire safety in the storage and use of flammable liquids*, RC 20 Part 1, RC20 Part 2 and RC57).

Consideration should be given to protecting stores containing flammable liquids with:

(1) sprinkler or spray systems enhanced with foam additives;

(2) zoned water-spray deluge systems using medium-velocity sprayers.

Bottled LPG

Storages containing substantial quantities of bottled liquefied petroleum gas (LPG) will require special protection measures. If sprinkler or water spray protection is designated to protect bottled LPG storage areas it is essential to ensure that adequate cooling is achieved to prevent escalation of the fire. Further information is contained in LP Gas Association CoP 7, *Storage of full and empty LPG cylinders and cartridges* and LPC Recommendations LPG6, *Storage, use and filling of liquefied petroleum gas in containers*. The fire insurers and HSE should also be consulted.

(b) EFFECTS OF STORAGE HEIGHT

The height of storage is one of the more influential factors in determining the design of a sprinkler installation, irrespective of the storage system employed. The difficulty in suppressing or controlling fires increases with the height of the storage. Storage height has a direct bearing on the mass per unit area and the potential total heat release and heat release rate. The height of the storage also influences the chimney effect of any flue within the stack. Increasing the height increases the drawing effect of a fire in the flue. A high storage height also inevitably means that substantial proportions of the fire load are shielded from the ceiling sprinkler water discharge. Fire control in the lower levels of goods is mainly dependent on water run down from the goods above, unless, as in the case of racked storage systems, intermediate-level sprinklers are installed.

(c) CEILING CLEARANCE

The ceiling clearance is defined as the height difference between the top of the stored goods and the ceiling sprinkler deflectors. Increasing the ceiling clearance extends the time to sprinkler operation and may reduce the actual delivered density applied to the top of the storage under fire conditions. Consequently, large clearances reduce the effectiveness of sprinkler protection. Full-scale sprinkler fire tests have demonstrated that with clearances of less than 4m suppression could be achieved with relatively few heads operating. Repeating the tests with greater clearances resulted in less effective control with a greater number of heads operating.

(d) STABILITY OF STORED GOODS

The stability of stored goods under fire conditions is a major factor in determining the rate of development and severity of a fire. As a general rule, the more stable the goods are in fire conditions, the greater the challenge to the ceiling sprinkler protection. The effect of stability can be most clearly demonstrated when comparison is made between the ceiling sprinkler requirements of free-standing and racked storage of the same commodity.

There may be substantial stability differences between similar commodities in free-standing storage arrangements. Storages that are prone to stack collapse at an early stage in fire development may open up the burning area of the fire load to the water discharge and reduce the stack height, aiding fire control. In some instances, stack collapse can also result in shielded fires and/or fire spread across aisles.

Where stack collapse is unlikely in the early stages of a fire and ceiling-only protection is employed, it is essential that appropriate discharge densities are available over the area of operation for an appropriate period of time, to control the fire spread and to enable the fire to be extinguished by the fire authority.

(e) SPRINKLER HEAD SELECTION

Sprinkler type and orifice size

Sprinkler head selection is a significant aspect of installation design. Fire tests have demonstrated that when protecting storage risks using ceiling protection only, 20mm sprinklers with a k factor of 115 are preferable to 15mm sprinklers with a k factor of 80. The larger-orifice sprinklers deliver more water with a higher percentage of large water droplets, compared to the smaller-orifice sprinklers, at any given pressure within the operating range. It is now thought that downward momentum of water discharge has a significant role in the effectiveness of water sprays on storage risks which also makes the selection of larger-orifice sprinklers the more technically attractive option.

Early Suppression Fast Response sprinklers

Early Suppression Fast Response (ESFR) sprinkler protection measures (see TB209) provide a new option for the sprinkler user to protect certain High Hazard storages and process risks with ceiling only protection. ESFR sprinklers have a k factor of at least 200 and apply water at high flux rates, particularly directly beneath the operating sprinklers. High levels of momentum are achieved over the areas of highest flux rate. ESFR sprinkler protection is designed to suppress fires rather than just control them and it is therefore essential that all the ESFR installation design and maintenance requirements listed in TB209 are complied with if this method of protection is to be applied successfully.

All applications for which ESFR sprinkler protection is recommended within these Rules have been verified by full scale fire testing.

Sprinkler thermal sensitivity

Full-scale fire testing has demonstrated that the use of quick-response sprinklers will result in earlier operation of the first sprinkler compared to standard response sprinklers, given identical conditions. By using quick-response sprinklers it is therefore possible to discharge water onto a fire at an earlier stage of development, thus reducing ceiling temperatures during a fire. However, using quick-response conventional and spray sprinklers for ceiling protection only, in full-scale fire-testing, has shown only a small improvement in performance compared to standard-response sprinklers, when comparing the amount of fire load consumed.

Quick-response sprinklers have shown marked performance advantages when used in intermediate-level rack protection, based on the layout for Category II goods, provided that suitable sprinkler heads are used. Appropriately selected quick-response sprinklers can check the development of fire up a rack system and ultimately suppress the fire. The appropriate sprinkler head may be identified in the *LPCB List of approved fire and security products and services*.

The use of quick-response standard sprinklers in ceiling arrays protecting risks where very fast developing or flash fires may take place has not yet been explored.

A limited amount of testing has been carried out comparing the effect of sprinkler sensitivity in dry-pipe installation applications. No firm conclusion has yet been reached.

TB217.4 CONSIDERATIONS

The fire hazard of stored goods is influenced by several factors, such as the rate of heat release, the rate of burning, accessibility to water discharge. The packaging materials and storage configuration play a major role in determining the level of sprinkler protection required.

To establish the level of protection required the procedure shown in Figure TB217.F1. shall be followed.

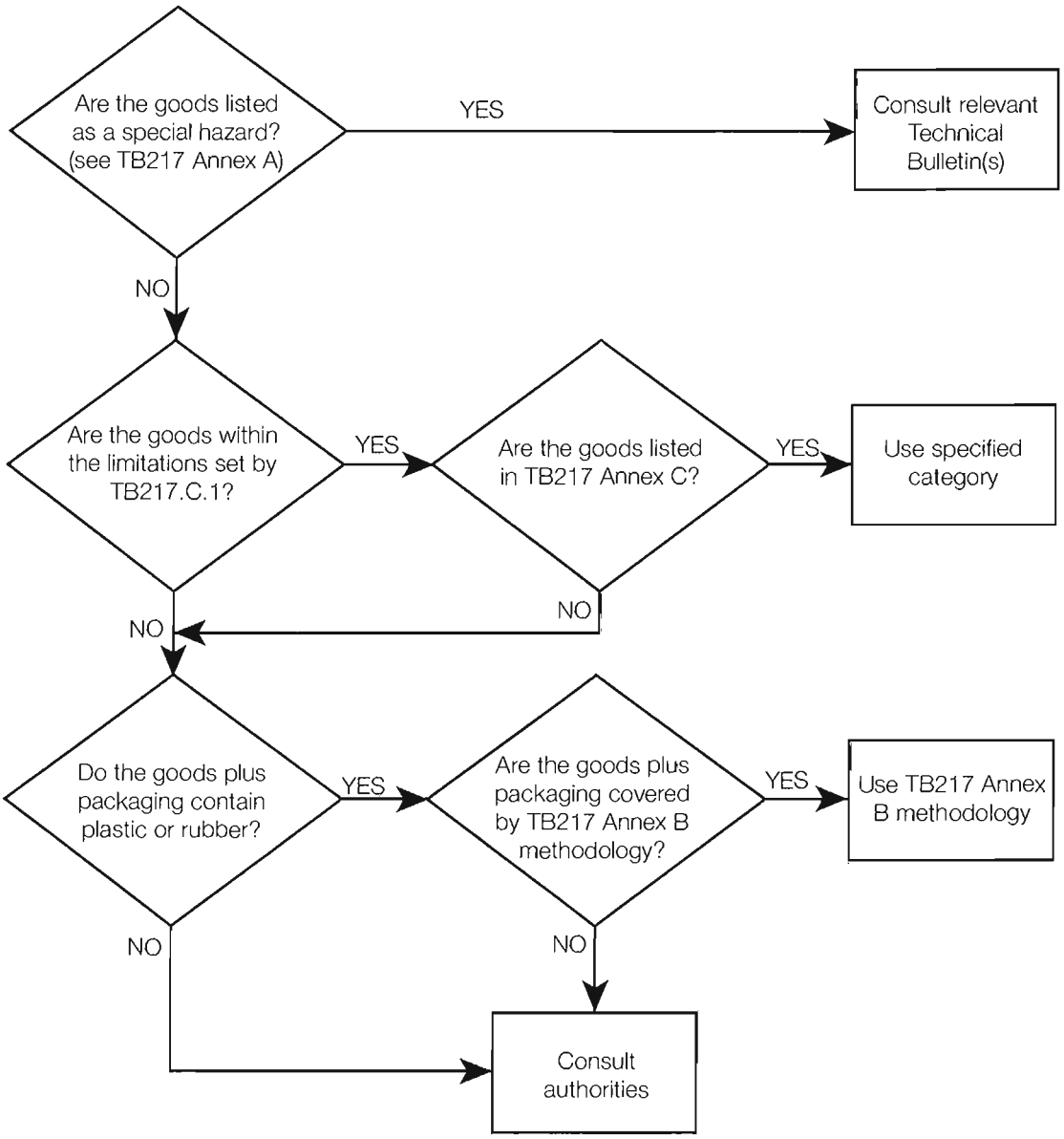

TB217.F1 Flow chart for determining the category of goods stored

TB217 ANNEX A: SPECIAL HAZARDS

TB217.A.1 Special hazards specified elsewhere

The following special hazards are dealt with in the stated Technical Bulletins or BS EN Clause.

Aerosols with flammable content	TB216: *Sprinkler protection of aerosols*
Clothes in multiple garment stores	BS EN Clause G.3 'Clothes in multiple garment hanging storage'
Flammable liquid storage	TB214: *Sprinkler protection of flammable liquid stores*
Pallets, idle	TB215: *Sprinkler protection of idle pallet storage*
Non-woven synthetic fabric	BS EN Clause G.7 'Non-woven synthetic fabric'
Polypropylene or polyethylene storage bins	BS EN Clause G.8 'Polypropylene or polyethylene storage bins'

TB217 ANNEX B: METHODOLOGY FOR CATEGORISING GOODS

TB217.B.1 Introduction

To categorise goods containing plastic or rubber this method requires an analysis of the materials used, including any packaging. The result of this analysis will yield a material factor. The storage configuration of the goods is then considered. The material factor combined with the storage configuration will determine the category of the stored goods. In some instances, the material factor number and category will be the same, but where plastics are involved the category may be higher than the material factor.

TB217.B.2 Material factor

A material factor of 1 to 4 shall be determined for all goods. The material factor shall take into account the product and packaging and pallet materials. Typical materials are listed below and modifying influences are shown pictorially in Figure TB217.F2.

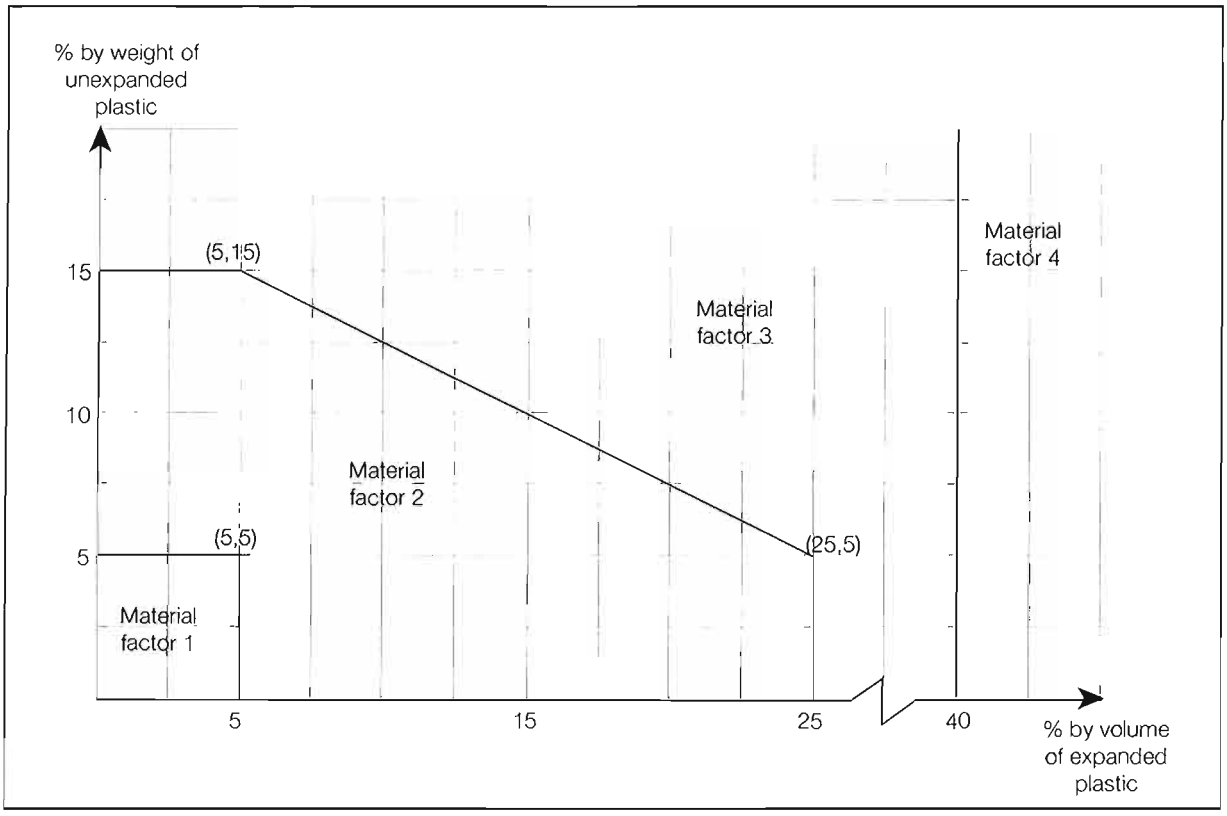

Figure TB217.F2 Material factors plastics content

TB217.B.2.1 *Material factor 1*

Non combustible materials either without packaging or packaging with a low energy content and having:

- an unexpanded plastic or rubber content less than 5% by weight; and
- an expanded plastic or rubber content less than 5% by volume (see Figure TB217.F2)

Examples:

Metal parts or tools with or without cardboard packaging on wooden pallets; powdered foods in sacks; tinned or bottled foods; cloth or fabric made wholly of natural fibres; leather goods; wood products; ceramics in cardboard or wooden packing cases; non-flammable liquids in plastic, glass or waxed paper containers; large electrical appliances.

TB217.B.2.2 *Material factor 2*

Goods which are potentially more difficult to sprinkler protect, having a higher energy content than in Material factor 1 (see Figure TB217.F2).

Examples:

Wood or metal furniture with plastic furnishings within the allowable limits; electrical equipment with plastic parts and packaging within the allowable limits; electrical cable on reels or in cartons; cloth or fabric with a synthetic fibre content.

TB217.B.2.3 *Material factor 3*

Goods that are made predominantly of unexpanded plastic or less than 40% expanded plastic or have a similar energy content (see Figure TB217.F2).

Examples:

Empty car batteries; plastic brief cases; personal computers; unexpanded plastic utensils.

TB217.B.2.4 *Material factor 4*

Goods with an expanded plastic or rubber content ≤40% by volume (see Figure TB217.F2) or materials with similar burning characteristics.

Examples:

Foam rubber mattresses; expanded polystyrene packaging; foam upholstery.

TB217.B.3 Determining the category of stored goods using the material factor

The category of the stored goods is determined by assessing the influence of storage configuration once the material factor is known. Consult Table TB217.B.T1, identify the most appropriate goods storage configuration description listed in columns 1 and 2. The category is given at the intersection with the appropriate material factor given in columns 3 to 6. If the goods are also listed in TB217 Annex C and the category is different to that determined using the methodology, the higher of the two categories shall be used.

Table TB217.B.T1 Category determined using material factor and stored material configuration

Column 1	Column 2	Column 3	Column 4	Column 5	Column 6
Storage configuration details[1]		Material factor			
Exposed surface	Stored goods	1	2	3	4
		Category			
Unexpanded plastic container	Non combustible solids and liquids which are in intimate contact with container	I, II, III	I, II, III	I, II, III	I, II, III
Unexpanded plastic container	Non combustible solids forming air gaps	III	III	IV	IV
Unexpanded plastic film	Non combustible solids	II	[2]	[2]	[2]
Unexpanded plastic film	Combustible solids	II, III	II, III	III	IV
Expanded plastic	Combustible or non combustible	IV	IV	IV	IV
Rubber, vinyl, unexpanded plastic	Solid blocks	I, II, III	I, II, III	III	IV
Paper or cardboard	Solid blocks	I	II	III	IV
Paper or cardboard	Open structured goods	II, III	II, III	III	IV
Paper or cardboard	Granular or powdered materials	I	II	III	IV

Note 1: The storage configuration details are described in greater detail in TB217.B.3.1 to TB217.B.3.9.
Note 2: Material factor not appropriate to description of storage configuration details, see TB217.B.3.3.

TB217.B.3.1 *Exposed unexpanded plastic container with non-combustible solids and liquids which are in intimate contact with the container*

This description applies to containers which hold non-flammable liquids or solids which are in direct contact with a high proportion of the internal container surfaces. It does not include metal components in storage bins or boxes.

Containers with non-combustible liquids: Category I

Small containers (≤50ℓ) with non-combustible solids: Category II

Large containers (>50ℓ) with non-combustible solids: Category III

Examples:

Plastic bottles of soft drinks or liquids with less than 20% alcohol; plastic drums containing inert powder such as talcum.

COMMENTARY AND RECOMMENDATIONS ON TB217.B.3.1

Non-combustible materials in plastic containers provide a heat sink and modify the rate of burning of the containers. Liquids usually have a greater effect than solids due to their greater thermal conductivity.

TB217.B.3.2 *Exposed unexpanded plastic container with non-combustible solids with air gaps*

This applies to plastic containers in which the contents have little or no heat sink effect. If the contact area between the container and the contents is small (≤25% of the potential storage envelope) Category III ratings should be increased to Category IV.

Example:
Metal parts in plastic storage bins.

TB217.B.3.3 *Unexpanded plastic film covering non-combustible solids*

These commodities only have a small proportion of plastic by weight (in the plastic wrapping, usually < 5%) and hence no categories are given for material factors 2, 3 and 4.

Example:
Shrink wrapped tinned foods.

COMMENTARY AND RECOMMENDATIONS ON TB217.B.3.3

In a fire, the plastic film is likely to burn rapidly and accelerate the fire spread.

TB217.B.3.4 *Unexpanded plastic film covering combustible solids*

Combustible solids may contain plastic and are hence given categories for material factors 1 to 4.

COMMENTARY AND RECOMMENDATIONS ON TB217.B.3.4

In a fire, the plastic film is likely to burn rapidly and accelerate the fire spread.

TB217.B.3.5 *Exposed expanded plastic*

Exposed expanded plastics are more challenging than expanded plastic in non-plastic containers and are classified as Category IV.

TB217.B.3.6 *Exposed unexpanded rubber, vinyl or plastic in solid blocks*

Unexpanded materials in solid blocks burn at a slower rate than the same materials with higher surface area to volume/mass ratios.

Example:
Vinyl floor tiles.

TB217.B.3.7 *Exposed paper or cardboard in solid blocks*

Example:
Cardboard flats.

TB217.B.3.8 *Paper or cardboard packaging with an open structure*

Materials with an open internal structure which present a large surface area to flames and allow ingress of air to burning surfaces will promote rapid spread of flame and a high rate of heat release.

Examples:

Empty cardboard boxes having a low structural strength:	Category II
Empty cardboard boxes having a high structural strength:	Category III
Paper rolls stored vertically (see also special risks):	Category III

TB217.B.3.9 *Exposed paper or cardboard containing unexpanded granular or powdered materials*

Example:

Plastic granules for plastics moulding stored in cardboard boxes or paper sacks.

TB217 ANNEX C: LIST OF GOODS AND THEIR CATEGORIES

TB217.C.1 LIMITATIONS

Table TB217.C.1 is applicable where the goods' packaging is no more hazardous than a cardboard box or single layer of corrugated cardboard wrapping. This limitation applies to the packaging only and is applied whether or not the goods are stored on pallets.

Table TB217.C.T1		
Product	Category	Comments
A		
Adhesives	I	Special protection required for flammable solvents, see TB214
Aerosols		See TB216
Asphalt paper	II	In horizontal rolls
Asphalt paper	III	In vertical rolls
B		
Batteries, dry cell	II	
Batteries, wet cell	II	Empty accumulators require special protection
Beer	I	
Beer	II	Containers in plastic or wooden crates
Books	II	
C		
Candles	III	
Canvas, tar impregnated	III	
Carbon black	II	
Cardboard (all types)	II	Stored flat
Cardboard, except corrugated	II	Rolls stored horizontally
Cardboard, except corrugated	III	Rolls stored vertically
Cardboard, corrugated	III	Rolls stored horizontally
Cardboard, corrugated	IV	Rolls stored vertically
Cardboard cartons	III	Empty heavy weight made up boxes
Cardboard cartons	II	Empty light weight made up boxes
Carpet tiles	III	
Carpets without foam backing	II	Storage in racks requires intermediate sprinklers
Carpets with foam backing	III	Storage in racks requires intermediate sprinklers
Cartons, waxed (flats)	II	
Cartons, waxed (made up)	III	
Cellulose (not cellulose nitrate or cellulose acetate)	II	Baled
Cellulose pulp	II	
Ceramics	I	
Cereals	II	Boxed
Charcoal	II	Excluding impregnated charcoal
Cloth, synthetic	III	
Cloth, wool or cotton	II	BS EN Annex G.3
Clothes	II	BS EN Annex G.3
Coconut matting	II	
Confectionery	II	
Cork	II	
Cork, baled	II	Special measures, such as an increased area of operation may be necessary
Crockery	I	
E		
Electrical appliances	I	Predominantly metal construction
Electrical cable or wire	II	Storage in racks requires intermediate sprinklers
Esparto	III	Loose or baled
F		
Fertilizer, solid	II	May require special measures

Table TB217.C.T1		
Product	Category	Comments
Fibreboard	II	
Firelighters	III	
Flax	II	Special measures, such as an increased area of operation may be necessary
Flour	II	In sacks or paper bags
Foods, tinned	I	In cardboard boxes and trays
Foods, tinned	I	Wrapped in unexpanded plastic film
Foodstuffs	II	In sacks
Furniture, upholstered	II	With natural fibres and materials but excluding plastics
Furniture, wooden	II	
Furs	II	Flat in boxes
G		
Glass fibre	I	
Glassware	I	Empty
Grain	II	In sacks
H		
Hemp	II	Special measures, such as an increased area of operation may be necessary
Hides	II	
J		
Jute	II	
K		
Knitwear	II	See clothes
L		
Laminated board	II	
Leather goods	II	
Linen	II	
Linoleum	III	
Luggage	IV	
M		
Matches	III	
Mattresses	II	
Meat	I	Chilled or frozen
Metal goods	I	
Milk powder	II	In bags or sacks
P		
Paints	I	Water based
Paints		Oil based, see TB214 Sprinkler protection of flammable liquids
Pallets, plastic (idle)		see TB215 Sprinkler protection of idle pallet storage
Pallets, wood (idle)		see TB215 Sprinkler protection of idle pallet storage
Paper	I	Sheets stored horizontally
Paper	II	Sheets stored vertically
Paper	III	Weight $\leq$5kg/100m^2, (eg tissue paper), rolls stored horizontally
Paper	IV	Weight $\leq$5kg/100m^2, (eg tissue paper), rolls stored vertically
Paper	III	Weight >5kg/100m^2, (eg newspaper), rolls stored vertically
Paper	II	Weight >5kg/100m^2, (eg newspaper), rolls stored horizontally
Paper, bitumen coated	III	

Table TB217.C.T1		
Product	Category	Comments
Paper, pulp	II	Rolled or baled
Paper, waste	III	Special measures, such as an increased area of operation may be necessary
Pillows	II	Feathers or down
R		
Rags	II	Loose or baled
Resins	II	Excluding flammable liquids
Roof felt in rolls	II	Horizontal storage
Roof felt in rolls	III	Vertical storage
Rope, natural fibre	I	
S		
Shoes, leather	I	
Shoes, synthetic	II	
Soap, water soluble	II	
Spiritous liquors	II	Cased glass bottles
String, natural fibres	I	
Sugar	II	In bags or sacks
T		
Textiles		See cloth
Timber, sawn	II	Not in ventilated stacks
Timber, sawn	III	In ventilated stacks
Timber, unsawn	II	
Tobacco	II	Leaf and finished goods
Tyres, stored horizontally	IV	Tyres stored vertically in racks are not covered in the Technical Bulletin
V		
Vegetable fibres	II	Hay, straw, hemp, cotton etc
W		
Wicker work	III	
Wine	I	
Wood		See timber
Wood, chipboard, plywood	II	Stored flat, not in ventilated stacks
Wood pulp	II	Baled
Wood veneer sheets	IV	
Wood wool	IV	Baled

Water supply diagrams

Relates to BS EN Clause 9

TB218.1 SCOPE

This Technical Bulletin contains details of typical water supply connections to sprinkler installations in diagrammatic form. These details supplement the requirements of BS EN 12845 Clause 9 and should be considered as 'informative'.

TB218.2 WATER SUPPLY DIAGRAMS

Figures TB218.F1 to F6 provide details in diagrammatic form of typical superior and duplicate water supplies.

Key
1. Town main, fed from both ends
2. Supply pipes
3. 50mm max. branch pipe
4. Installation control valves
5. Riser
6. 40mm connection for non-industrial purposes
7. 50mm connection for hose reels

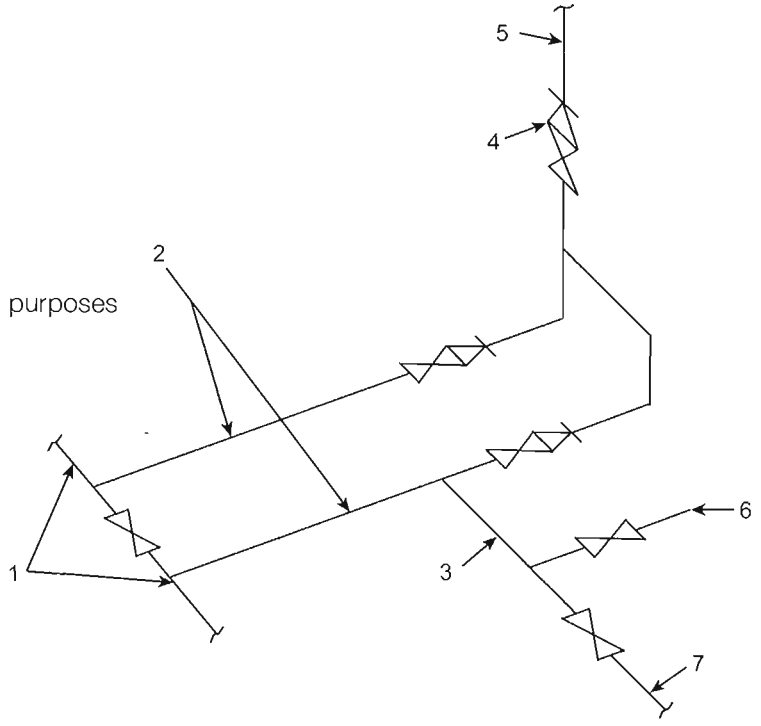

Figure TB218.F1 Superior supply using town main

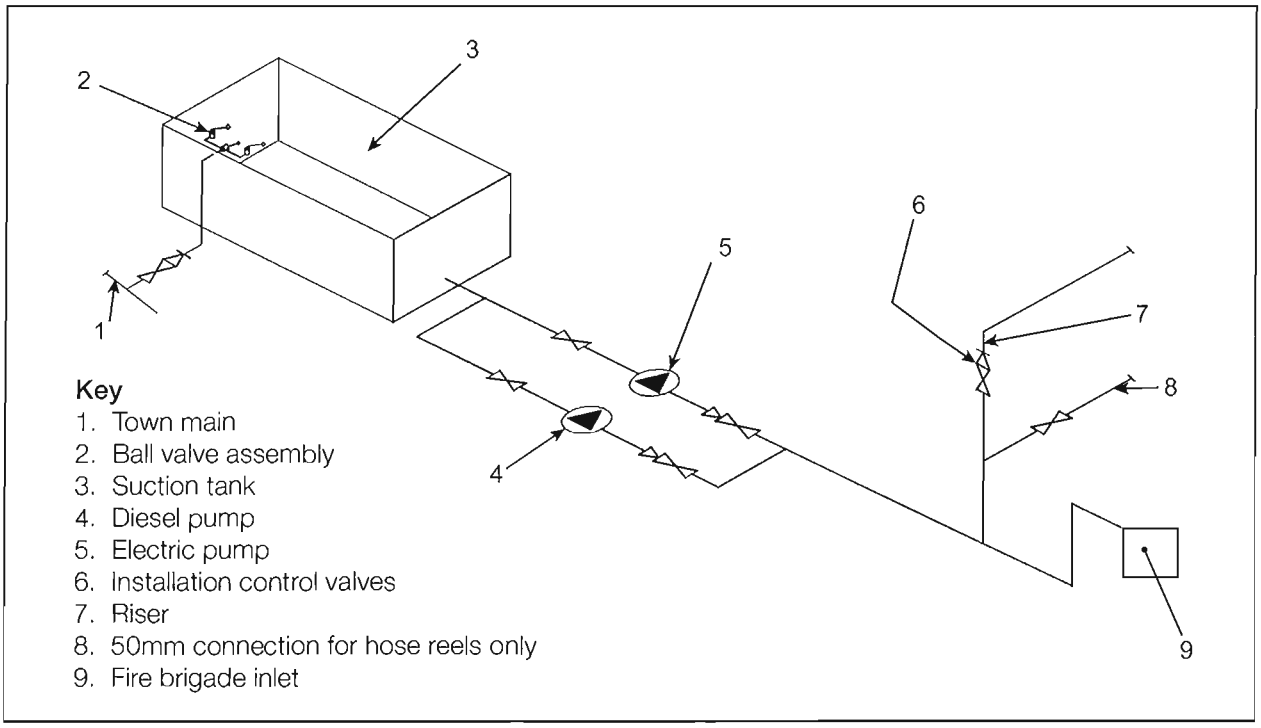

Figure TB218.F2 Superior single supply using suction pumps

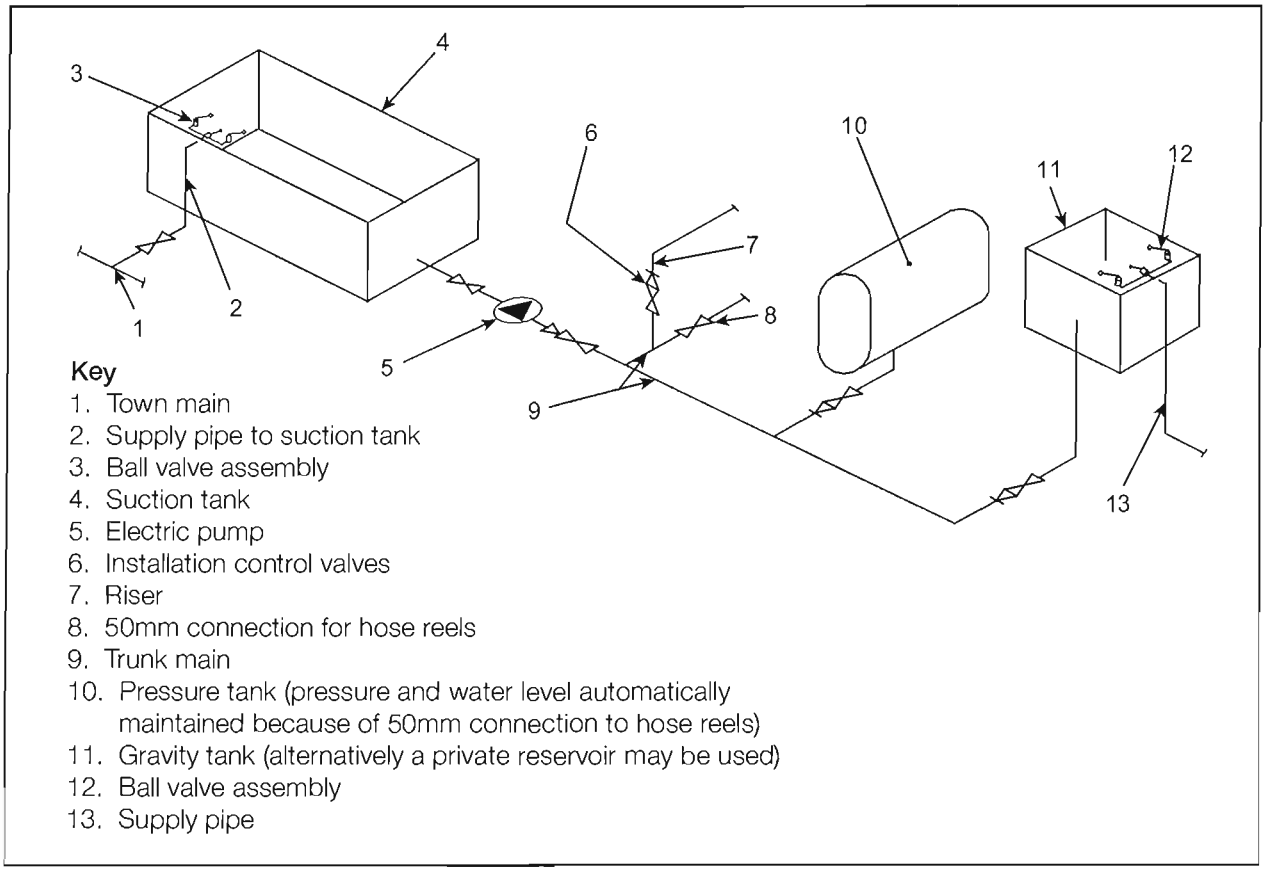

Figure TB218.F3 Duplicate supplies using selection from suction pump/pressure tank/gravity tank

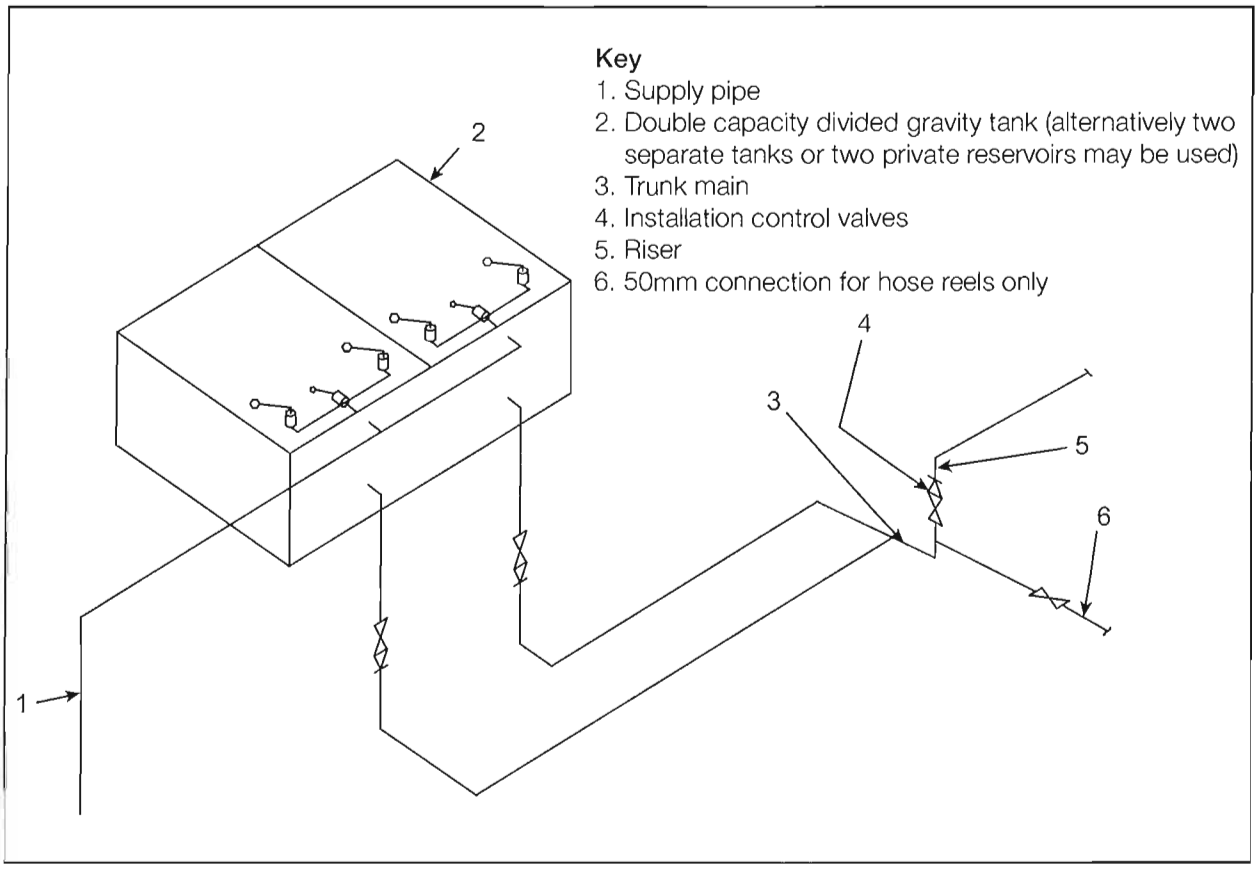

Figure TB218.F4 Duplicate supplies using two gravity tanks

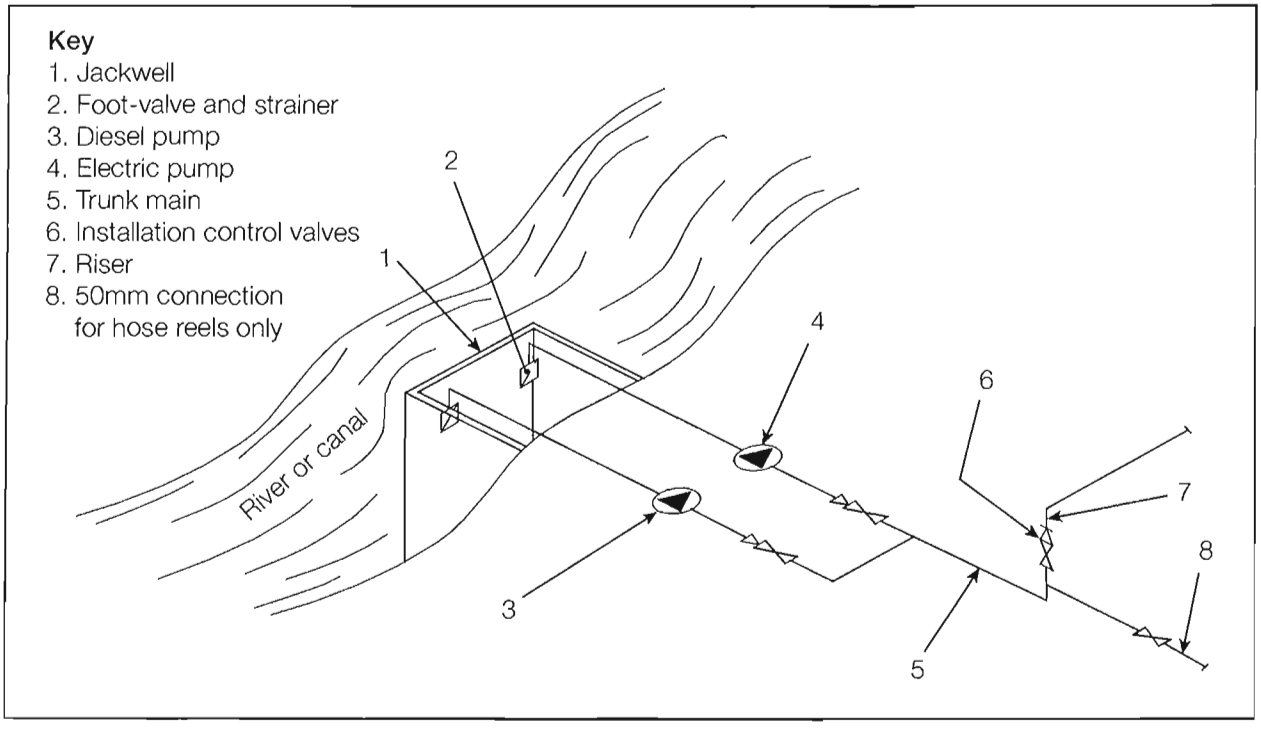

Figure TB218.F5 Duplicate supplies using two suction pumps from river or canal (suction lift condition)

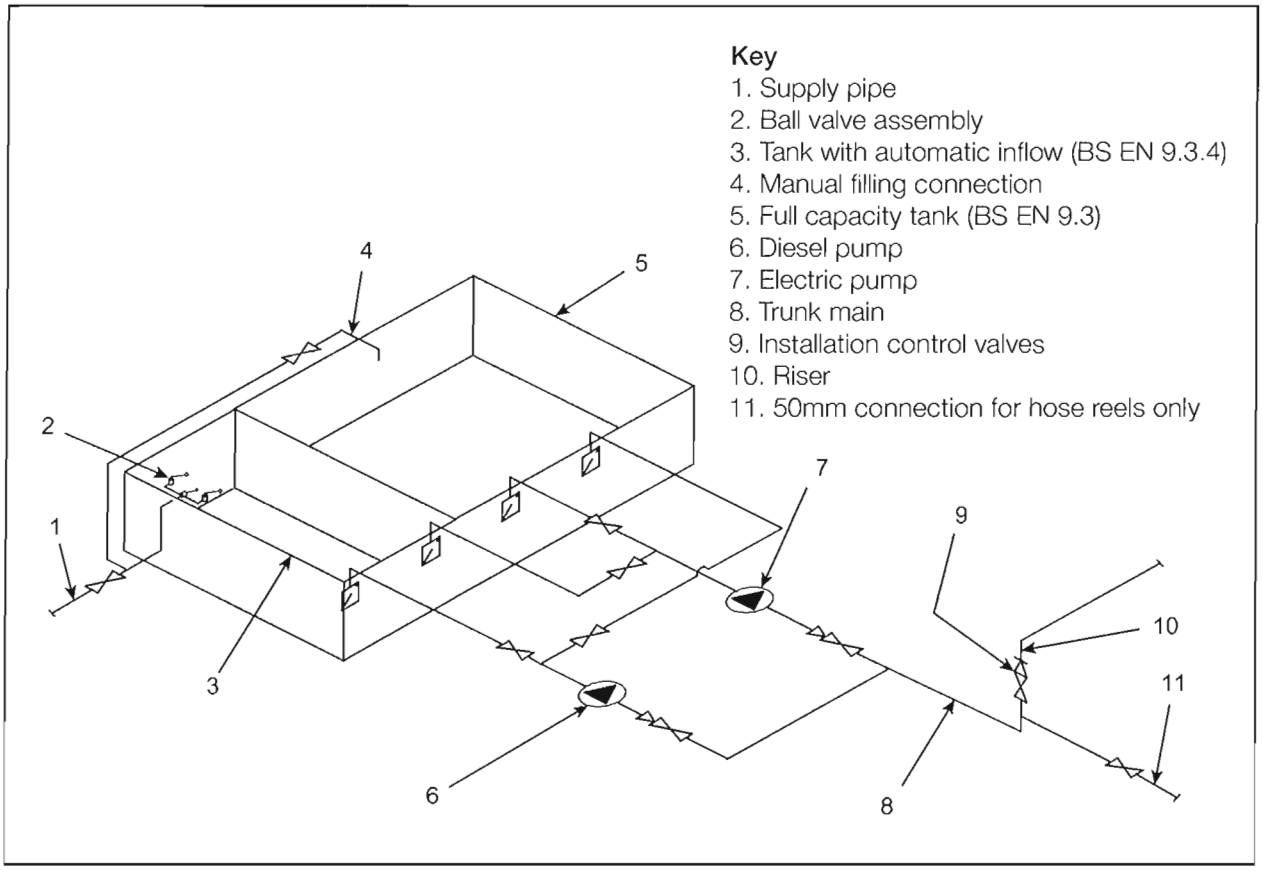

Figure TB218.F6 Duplicate supplies using two suction pumps from a limited capacity tank and full capacity tank

Sprinkler protection of cold stores

TB219.1 SCOPE

This Technical Bulletin supplements the requirements of BS EN Clauses 11.2, 11.3, 11.4, 11.5 and J.4, where sprinkler protection is provided in cold stores and warehouses.

TB219.2 GENERAL

The advice provided in this Technical Bulletin relates to dry pipe, subsidiary dry pipe and pre-action sprinkler systems and also to dry sprinklers used on wet pipe sprinkler systems.

Designers, suppliers, installers, users and owners of pressure equipment and systems have a duty to provide a safe workplace and safe equipment. The main regulations covering pressure equipment are the Pressure Equipment Regulations 1999 (as amended) and the Pressure Systems Safety Regulations 2000.

TB219.3 INTERACTIONS WITH OTHER SYSTEMS

In cold-storage warehouses refrigerated by air circulation, automatic means shall be provided to shut down the air circulation system immediately on detection of a fire or when the sprinkler system operates.

Sprinklers should be installed in positions where there is no likelihood of mechanical damage through movements of goods. Any sprinklers, other than ceiling or flush sprinklers, installed in a position where there is a risk of accidental damage shall be fitted with a metal guard suitable for the purpose of protecting the sprinkler head.

TB219.4 DRY INSTALLATIONS DESIGN AND PERFORMANCE

The water discharge time of dry, pre-action sprinkler systems, including any subsidiary dry pipe extensions in cold stores, shall be determined by calculation at the design stage. The discharge time performance shall be confirmed by tests at the commissioning stage using the remote test valve specified in BS EN Clause 15.5.2. The maximum time between sprinkler operation and water discharge shall be not more than the values given in Table TB219.T1.

Table TB219.T1 Maximum time between sprinkler operation and water discharge

Hazard class	Maximum time between sprinkler operation and water discharge (s)
OH	60
HH	30

TB219.5 DRY PIPEWORK

Installation designs shall allow for inspection of pipework to establish that they are free from ice or other obstructions. Provisions shall be made for thorough purging of moisture after valve operation.

Installation pipework shall be above ground and accessible. The pipework shall be readily dismantleable. At the point of entry of the pipework into the cold chamber and otherwise where practicable, a change of pipe direction shall be made by a tee having one branch sealed off, to allow for inspection.

Pipe fittings shall be fit for purpose and shall facilitate easy removal of the pipework. Consideration shall be given to the use of compression fittings, mechanical pipe couplings or preferably flanged joints.

Pipe supports shall be such as to facilitate easy removal of the pipework. Hangers of the split ring type secured by hexagonal head bolts and hexagonal nuts are recommended.

TB219.6 PRESSURISATION OF DRY INSTALLATION PIPEWORK

TB219.6.1 Pressurisation gas supplies

The installation pipework downstream of the dry system installation control valve and of any tail-end control valve(s) shall be pressurised with:

(1) dry nitrogen gas; or

(2) air drawn across the freezers of lowest temperature in the plant and through a chemical dehydrator.

Note 1: Nitrogen is an asphyxiating gas and the system owner and user should be consulted about its use as a pressurising gas to enable a risk assessment to be carried out.

Note 2: Nitrogen cylinders should be fitted with a suitable pressure-reducing valve to control the pressure. A pressure relief valve should be fitted, to operate at the upper limit of the required installation gas pressure.

TB219.6.2 Pressurisation of tail-end installations on dry-pipe systems

The air/gas pressure in a series of tail-end installations, on one set of main installation control valves operating on the dry pipe or alternate wet and dry pipe principle, shall be not less than the air pressure in the feed pipe(s) between the main installation control valve and the tail-end dry pipe.

Differential dry pipe valves used in tail-end installations connected to an installation operating on the dry pipe or alternate wet and dry principle shall be suitable for sprinkler service and shall retain air pressure in the installation pipework between the main control valves and the underside of the tail-end dry pipe or valves.

TB219.7 USE OF DRY PENDENT OR UPRIGHT SPRINKLERS

TB219.7.1 Dry pendent or upright sprinkler pipe length

The length of the drop or rise pipe on a dry sprinkler within the heated area shall be of sufficient length to prevent freezing at the wet pipe end due to conduction of heat to the cold store. The minimum length for the drop pipe shall be determined using the following equation:

$$L = -0.0137(T_c + 6{,}67)$$

where:

L = minimum length of the drop pipe (in metres), within the heated area, ie drop pipe length exposed in heated area. It should not include the length covered by cold store ceiling insulation or exposed to cold store temperatures.

T_c = minimum temperature of cold store (°C).

TB219.7.2 Dry pendent or upright sprinkler k-factor

For water flow calculations, the k-factor shall be assumed to include the friction loss in the drop pipe of the unit and, if appropriate, the effect of any internal mechanical device forming an obstruction.

TB219.7.3 Dry pendent or upright sprinkler static pressure considerations

The static head gain or loss in the drop or rise pipe respectively shall be allowed for in the hydraulic calculations.

TB219.7.4 Dry pendent or upright sprinkler inspection

Dry sprinklers should be inspected at regular intervals for ice build-up or signs of ice formation in the sprinkler rise or drop pipe. Visual inspections shall take place at least annually.

Note: Water and water vapour ingress into a dry 'drop' sprinkler should be avoided. Water ingress may occur at:

(1) the valve, due to a faulty seal; or

(2) the connection between the drop pipe and dry sprinkler valve assembly due to poor seals allowing atmospheric pressure changes and pressure differentials to draw moist air into the dry sprinkler pipe. Significant pressure differentials may be more prevalent in small cold stores, where the effect of door openings is more significant and with units where there may be cyclical temperature changes.

Any water ingress into the sprinkler pipe will freeze, resulting in ice build-up. Ice build-up may seriously impair sprinkler performance and may prevent sprinkler operation or cause obstructions to the water flow.

Where ice build-up occurs or if ice extrudes through any drain aperture in the sprinkler heat-sensitive element support, the dry sprinkler assembly should be removed and replaced.

Power supplies for sprinkler pumps

TB220 has been replaced by TB210

Sprinkler protection of schools

TB221.1 INTRODUCTION

This Technical Bulletin has been prepared in response to the increasing reliance on sprinkler protection in schools for property protection purposes. Stakeholders are encouraging sprinkler protection in new and existing school premises to combat arson and limit fire losses in schools. Schools are classified as Light Hazard occupancies in BS EN Annex A; in projects where this minimum level of protection might otherwise be applied, the application of this Technical Bulletin should be considered as a more appropriate level of protection for the hazard. When this Technical Bulletin is applied it should take precedence over any conflicting requirements in the *LPC Rules for automatic sprinkler installations Incorporating BS EN 12845*, relating to the protection of schools.

TB221.2 SCOPE

This Technical Bulletin specifies requirements for the sprinkler protection of schools for property protection purposes. Its use is limited to schools, the purpose of which is to teach children and young people, including infant, primary, secondary and special needs schools. The requirements include new requirements for the classification of hazard, selection of sprinklers and provision of water supplies. The requirements may be applied to sleeping and living accommodation in boarding schools.

The requirements of this Technical Bulletin should not be applied to properties other than schools.

TB221.3 EXTENT OF SPRINKLER PROTECTION

TB221.3.1 Buildings to be sprinkler protected

The sprinkler system shall provide protection to all parts not specified as exceptions in TB221.3.2. All exceptions to sprinkler protection shall be agreed with the insurer and authorities having jurisdiction.

TB221.3.2 Optional exceptions

Sprinkler protection shall be considered for, but need not be provided in, the following parts of buildings:

(a) stairs, spaces below stair headings (but not rooms above a stair) and lift wells. Any part not provided with sprinkler protection shall be enclosed by walls, ceilings and floors, with a fire resistance of not less than 120min, in which the doors are not less than 60min fire resistance and in which glazed areas are of not less than 60min fire resistance or in the case of stairs are protected by cut-off sprinklers. The area of glazing within doors shall not exceed 1.5m^2 in each storey.

(b) rooms or compartments containing electric power distribution apparatus such as switchgear and transformers, and used for no other purpose(s). Any part not provided with sprinkler protection shall be enclosed by walls, ceilings and floors, with a fire resistance of not less than 120min, in which the doors are not less than 60min fire resistance.

TB221.3.2.1 Communicating buildings

Sprinkler protection shall be considered for but, with the consent of the insurer, need not be provided in communicating buildings or storeys separated from the sprinklered building by walls of not less than 120min fire resistance in which each opening is protected by two (arranged in series) fire doors or shutters, each of not less than 120min fire resistance.

TB221.3.2.2 *Outbuildings*

Sprinkler protection shall be considered for but need not be provided in outbuildings that are separated from the sprinklered building by at least 10m.

TB221.4 SELECTION OF INSTALLATION TYPE

TB221.4.1 Wet pipe installations

Sprinkler installations shall preferably be of the wet-pipe type.

TB221.4.2 Protection from freezing

Wet-pipe installations shall only be used where there is no danger of the water in the pipes freezing. Parts of the installation which may be subject to freezing may be protected by electrical trace heating or use of a dry-pipe or alternate extension.

TB221.4.3 Subsidiary dry-pipe or alternate extensions

Subsidiary dry-pipe and alternate extensions shall be limited to 10 sprinklers on any subsidiary extension.

TB221.4.4 Protection by trace heating

Protection by trace heating system shall comply with BS EN Clause 11.1.2.2.

TB221.5 CONTRACT ARRANGEMENTS

Contract arrangements shall comply with normal custom and practice as specified in BS EN Section 4.

TB221.6 WATER SUPPLIES FOR PROPERTY PROTECTION SYSTEMS

Water supplies shall be at least one of the following:

(a) single main complying with BS EN Clause 9.2.1;

(b) single automatic suction pump drawing from a water source complying with TB221.7;

(c) single automatic booster pump, drawing water from a town main complying with BS EN Clause 9.2.2.

TB221.7 WATER STORAGE

Water storage shall comply with the requirements of BS EN Clause 9.3, other than pump suction and gravity tanks which shall comply with this Technical Bulletin.

TB221.7.1 Refilling conditions for full capacity suction tanks

Refilling conditions for full capacity tanks shall comply with BS EN Clause 9.3.3.

TB221.7.2 Reduced capacity suction or gravity tanks which are dependent on inflow

The following conditions shall be met for reduced capacity tanks:

(a) the inflow shall be from a town main and shall be automatic via at least two mechanical float valves;

(b) the inflow shall not adversely influence the pump suction;

(c) the minimum effective capacity of single reduced capacity tanks shall not be less than that shown in Table TB221.T1, column 6;

(d) the tank capacity plus the inflow shall be sufficient to supply the system full capacity given in Table TB221.T1, column 3 over the duration t, given in column 5;

(e) the effective capacity shall be calculated by taking the difference between the normal water level and the lowest effective water level;

(f) it shall be possible to check the capacity of the inflow;

(g) the inflow arrangement shall be accessible for inspection.

Table TB221.T1 Water storage capacities

Column 1	Column 2	Column 3	Column 4	Column 5	Column 6
Ordinary Hazard group	Height h above the lowest sprinkler[1] m	Pre-calculated minimum full capacity m^3	Hydraulically calculated mimimum full capacity[2] m^3	Duration of supply t min	Minimum reduced supply m^3
1	$h < 15$ $15 < h \leq 30$ $30 < h \leq 45$	27,5 35 40	$(t \times Q_{max})$ 1000	30	10
2	$h < 15$ $15 < h \leq 30$ $30 < h \leq 45$	105 125 140	$(t \times Q_{max})$ 1000	60	20
3	$h < 15$ $15 < h \leq 30$ $30 < h \leq 15$	135 160 185	$(t \times Q_{max})$ 1000	60	30

Note 1: Excluding any sprinklers in the pump or valve room.
Note 2: Where:
Q_{max} is maximum demand flow in ℓ/min
t is duration of supply in minutes (specified in column 5)

TB221.7.3 Pump suction tanks not dependent on inflow

TB221.7.3.1 *Pre-calculated systems*

Table TB221.T1, column 3 shall be used to determine the effective volume of water required.

TB221.7.3.2 *Hydraulically calculated systems*

Table TB221.T1 columns 4 and 5 shall be used to determine the effective volume of water required.

TB221.7.4 Fire and rescue service inlets

A fire and rescue service inlet shall be provided for all stored water applications. The fire authority should be consulted.

TB221.8 CLASSIFICATION OF OCCUPANCIES AND FIRE HAZARD

TB221.8.1 Fire risk assessment to determine the hazard classification

A fire risk assessment shall be carried out to determine the appropriate hazard classification of the buildings to be sprinklered.

TB221.8.2 Hazard classification

The occupancy of schools or parts thereof shall be classified as at least Ordinary Hazard Group 1. Should the presence of combustible materials or fire loadings exceed Ordinary Hazard Group 1 conditions the appropriate hazard group should be applied. No parts of school buildings should be classified as light hazard.

TB221.9 DESIGN DENSITY AND AMAO FOR FULLY HYDRAULICALLY CALCULATED INSTALLATIONS

Sprinkler systems shall comply with the relevant requirements of BS EN Clause 7.

TB221.10 SPRINKLER TYPES AND APPLICATIONS

TB221.10.1 Sprinkler selection

Sprinklers shall be used in accordance with the limitations and uses indicated in Table TB221.T2.

Table TB221.T2 Sprinkler selection and design density

Pattern (k factor)	Design density mm/min	Applications
Spray (k80)	5,0	General room protection. Suitable for the protection of floor, ceiling or roof spaces greater than 2,4m high.
Ceiling or flush pattern[1](k80)	5,0	General room protection. Not suitable for the protection of floor, ceiling or roof spaces.
Recessed (k80)	5,0	General room protection, where sprinklers could be subject to accidental damage or tampering. Not suitable for the protection of floor, ceiling or roof spaces.
Concealed (k80)	5,0	General room protection, where it is considered essential to conceal the presence of sprinklers from the building occupants. Not suitable for the protection of floor, ceiling or roof spaces.
Sidewall (k80)	5,0	May be used in corridors passageways or narrow rooms.
Conventional (k80)	5,0	Conventional sprinklers shall be used to protect floor, ceiling or roof spaces not exceeding 2,4m in height.
Domestic or residential pattern[2]	5,0	Domestic or residential sprinkler complying with BS DD 252, may be used in small rooms not requiring more than two sprinklers, where life safety is a consideration. Their installation shall comply with the manufacturers' data sheet.

Note 1: Ceiling or flush pattern sprinklers include products that are designed to fail at a predetermined load and may be referred to as anti-ligature sprinklers.
Note 2: Domestic or residential sprinklers should only be used in life safety applications which are suited to their use. The design density should not be less than 5,0mm/min for the appropriate ordinary hazard AMAO.

TB221.10.2 Sprinkler thermal sensitivity

Sprinklers with a thermal sensitivity rating of 'Quick', 'Special', 'Standard' may be used. Sprinklers that are 'unrated' may also be used where appropriate.

Note: Where sprinklers are used that are unrated, such as concealed or recessed pattern sprinklers, they should be equipped with temperature sensitive elements capable of achieving a 'quick' thermal sensitivity rating when used in a spray or conventional pattern sprinkler. Sprinkler thermal sensitivity ratings are described in TB207.

TB221.10.3 Sprinkler guards

Sprinklers, with the exception of recessed or concealed sprinklers, that may be subject to accidental damage shall be fitted with a metal guard.

TB221.11 TRANSMISSIONS OF ALARMS TO A FIRE AND RESCUE SERVICE

TB221.11.1 Ordinary Hazard Group 1 systems with stored water supplies

Where the protection provided is in accordance with Ordinary Hazard Group 1 and having a stored water supply of 30 minutes duration (or equivalent for pre-calculated systems), provision shall be made to transmit fire and fault alarms automatically to a central station for fire alarm signalling approved by a nationally accredited, independent, third-party approvals organisation.

TB221.11.2 Ordinary Hazard Group 1 systems other than those specified in TB221.11.1

In all other cases provision shall be made to transmit fire and fault alarms automatically to a permanently staffed location, on or off the premises, to a responsible person in such a way that appropriate action shall be taken immediately. Consideration shall be given for the provision of automatically transmitting fire and fault alarms to a central station for fire alarm signalling approved by a nationally accredited, independent, third-party approvals organisation.

TB221.12 SECURITY

Consideration shall be given to the security of installation control valve sets, pumps, water supplies and any subsidiary stop valves that may isolate the water supply from the sprinkler installation. The installation control valves and any pumpsets shall be located in a secure location to prevent tampering.

Each stop valve capable of interrupting the flow water to the sprinkler installation shall be provided with a tamper-proof device to monitor its status. Each monitoring device shall be electrically connected to a control and indicating panel, installed at an accessible location on the premises.

Signs required by BS EN Clauses 18.2.1 and 18.2.2 may be omitted providing the agreement of the fire authority is obtained.

TB221.13 MAINTENANCE

The sprinkler system shall be regularly maintained in accordance with TB203 and shall be the subject of a maintenance contract with a sprinkler installation company certificated to LPS 1048 by the LPCB or certificated to an equivalent scheme.

Ordinary Hazard Group 3 protection using Enhanced Protection Extended Coverage sprinklers

TB222.1 INTRODUCTION

This Technical Bulletin details Ordinary Hazard Group 3 protection methods using Enhanced Protection Extended Coverage (EPEC) sprinklers and supplements existing practices described in BS EN 12845. Use of EPEC sprinklers, complying with an exacting performance specification, allows increased sprinkler coverage areas of up to 17,64m² per sprinkler. The protection described has been based on extensive sprinkler tests involving Actual Delivered Density (ADD) and commodity fire tests.

EPEC (k115) sprinklers developed for use at 17,64m² have a significantly different water distribution characteristic from conventional and spray pattern sprinklers. In addition to meeting the constructional requirements of EN 12259-1: *Fixed firefighting systems. Components for sprinkler and water spray systems. Sprinklers*, each EPEC sprinkler is subjected to a comprehensive series of ADD fire tests that characterise sprinkler performance over the pressure range of the sprinkler, in accordance with specified performance requirements. EPEC sprinklers are an essential element to achieve the level of fire control assumed by this Technical Bulletin. The reduced water supply storage volumes allowed result from the increased effectiveness of the sprinkler protection. The sprinkler may be identified by the marking 'EPEC'.

TB222.2 DESIGN PRACTICE

The system design and general protection methods shall be in accordance with *LPC Rules for automatic sprinkler installations incorporating BS EN 12845* or BS EN 12845, except where otherwise specified in this Technical Bulletin.

EPEC sprinkler installations shall also comply with any recommendations or limitations stated in the sprinkler suppliers' data sheet.

All pipe sizing shall be by hydraulic calculation. Precalculated pipe sizing tables shall not be used.

Where dry-pipe sprinkler installations are to be used, the time for water to discharge from any sprinkler in the installation shall be predicted by calculation at the design stage. The calculated time to discharge shall comply with TB222.11.9.

Note: In order to ensure compliance of dry-pipe systems with the time for water to discharge from an open sprinkler it may be prudent to assume a shorter discharge time than 30 seconds at the design stage to ensure compliance when tested.

TB222.3 OCCUPANCY AND FIRE HAZARD

TB222.3.1 Classification of occupancy

Occupancies to be protected in accordance with the requirements of this Technical Bulletin shall be Ordinary Hazard in character and shall be subdivided into two sub-groups:

- OH3/10; and
- OH3/12,5.

The following conditions shall be met:

(1) the maximum storage heights specified in Table TB222.T1 shall not be exceeded;

(2) the maximum storage area shall not exceed 100m² for any single block with less than 1,5m clearance around the block;

(3) the maximum ceiling height shall not exceed 5,5m;

(4) ceiling slope shall not exceed 9½° (170mm/m);

(5) containers with an open top shall not be stored in the protected areas;
Note: Containers with the open end down are acceptable.

(6) no process occupancies classified as OH4 shall be within the protected areas.

Table TB222.T1 Maximum storage heights for OH Group 3 EPEC protection

	Maximum storage height m			
Type of installation[1]	OH3/10 Wet-pipe and Pre-action Type B OH3/12,5 Dry-pipe		OH3/12,5 Wet-pipe and Pre-action Type B	
Storage category	Free standing or block stacking[2]	All other storage methods[3]	Free standing or block storage[2, 4]	All other storage methods[2, 4]
I	4,0	3,5	4,5	4,0
II	3,0	2,6	4,0	3,5
III	2,1	1,7	3,1	2,6
IV[5]	1,2	1,2	1,5	1,5

Note 1: Wet pipe systems are preferred.
Note 2: Free standing and block stacking ST1 only.
Note 3: All other storage methods ST2 to ST6.
Note 4: Storage to the heights specified may not exceed 4m² in plan area; see TB222.3.2.
Note 5: Not including exposed expanded plastic.

TB222.3.2 OH3/12,5 storage area limitations

Storage in OH3/12,5 protection, which exceeds the height specified for OH3/10, shall not be greater than 4m² in plan area but may be contiguous with lower height storage allowed for OH3/10. Where there is more than one area of storage to these heights within a continuous block of storage, storage areas above the height specified for OH3/10 shall be separated by gaps of at least 1,5m.

TB222.4 LIMITATIONS OF USE

This form of protection should not be used where any of the following conditions occur:

(1) materials in which fires cannot readily be controlled by sprinklers (example: acrylic fibre yarn storage);

(2) commodities or storage arrangements which may give rise to unusually severe fire characteristics (example: light weight paper storage);

(3) open top storage containers (example: open top tote boxes);

(4) ceilings with joists, deep beams or significant obstructions;

(5) dry-pipe installations where the calculated time for water to discharge from any

sprinkler in the installation or the measure time from a test valve exceeds the maximum time specified in TB222.11.9;

(6) town main connections or reduced capacity water storage tanks where the performance of the town main has not been verified by testing.

TB222.5 SPRINKLER SELECTION

Sprinklers installed shall be in accordance with Table TB222.T2.

Table TB222.T2 Sprinkler selection			
Application	Sprinkler type	Nominal k factor	Thermal sensitivity
Ceiling or roof protection	EPEC	115	Quick
Concealed spaces (roof or ceiling voids)	See TB223		

TB222.6 HYDRAULIC DESIGN CRITERIA

TB222.6.1 Low and high flow conditions

The minimum design density and minimum sprinkler operating pressure shall be no less than the appropriate value given in Table TB222.T3.

Table TB222.T3 Design criteria						
Hazard classification		Low flow conditions		High flow conditions		
	Maximum area per sprinkler	Minimum operating sprinkler pressure	Number of sprinklers operating	Minimum design density	Area of operation: Wet pipe and pre-action Type B installation	Area of operation: Dry pipe installation
	m^2	bar		mm/min	m^2	m^2
OH3/10	≤ 16	1,9[1]	4	6,0	160	– [5]
OH3/12.5	≤ 16	3,0[2]	4	6,5	160	200
OH3/10	>16 ≤ 17.64	2,3[3]	4	6,0	160	– [5]
OH3/12.5	>16 ≤ 17.64	3,6[4]	4	6,5	160	200

Note 1: A sprinkler operating pressure of 1,93bar generates a density of 10mm/min with a sprinkler k factor of 115 and coverage area of 16m²/sprinkler.
Note 2: A sprinkler operating pressure of 3,02bar generates a density of 12,5mm/min with a sprinkler k factor of 115 and coverage area of 16m²/sprinkler.
Note 3: A sprinkler operating pressure of 2,35bar generates a density of 10mm/min with a sprinkler k factor of 115 and an area of 17,64m²/sprinkler.
Note 4: A sprinkler operating pressure of 3,68bar generates a density of 12,5mm/min with a sprinkler k factor of 115 and coverage area of 17,64m²/sprinkler.
Note 5: OH3/10 level of protection not suitable for dry pipe installations, use OH3/12,5.

The minimum sprinkler operating pressure shall not be less than the values specified in Table TB222.T3 for the low flow conditions when either all the sprinklers in the room or four sprinklers are operating, whichever is the fewer.

The minimum design density shall not be less than the value specified in Table TB222.T3 for the high flow condition when all the sprinklers in the room or the sprinklers in the area specified are in operation, whichever is the fewer.

TB222.6.2 Design density

The density of discharge shall be calculated in accordance with BS EN Clause 13.4.1.

TB 222.6.3 Shape of areas of operation for hydraulic calculation purposes

The shapes of the high flow condition areas of operation shall comply with BS EN Clause 13.4.3.

The shape of the low flow condition group of 4 sprinklers used for hydraulic calculation purposes shall, where possible, be a square or rectangle.

TB222.7 CALCULATION OF MAXIMUM FLOW DEMAND, MINIMUM ALLOWABLE DENSITIES AND SPRINKLER PRESSURES

Carry out the three sets of pressure-flow calculations identified in Table TB222.T4 for each installation to determine that the installation design requirements are met.

Table TB222.T4 Calculation of maximum flow demand, minimum allowable densities and pressures

Calculation set	Condition specified in Table TB222.T3	Area of operation (Sprinklers operating) m^2	Location of area of operation or sprinklers operating	Calculation results
1. Maximum demand flow	High flow condition	160(1) 200(3)	Hydraulically most favourable(3)	Flow from sprinklers within area of operation, any additional sprinklers(5)
2. Minimum allowable density	High flow condition	160(1) 200(2)	Hydraulically most remote(4)	Density from hydraulically most remote four sprinklers within area of operations
3. Minimum sprinkler operating pressure	Low flow condition	(Four sprinklers)	Hydraulically most remote	Sprinkler operating pressure for four sprinklers operating

Note 1: Area of operation for wet-pipe and pre-action Type B installations.
Note 2: Area of operation for dry-pipe installations.
Note 3: The calculation set must verify the location of the hydraulically most favourable area of operation in the installation; see BS EN Clause 13.4.2.2.
Note 4: The calculation set must verify the location of the hydraulically most remote area of operation in the installation; see BS EN Clause 13.4.2.1.
Note 5: Flow from any additional sprinklers that are located within the area of operation, such as sprinklers beneath obstructions, shall be included in the calculation.

TB222.8 WATER SUPPLIES

TB222.8.1 Installation demand

The water supplies for the sprinkler installation shall be capable of providing sufficient pressures and flows to satisfy the installation demand conditions determined by the calculations, specified in TB222.7.

TB222.8.2 Duration

If the water supply is used for other firefighting systems as permitted in BS EN Clause 9.6.4, all qualifying conditions shall be complied with. The duration of the water supply to the sprinkler installation shall be assumed to be 30 minutes or the duration required for the other firefighting systems, whichever is the longer.

Each water supply shall have sufficient capacity for the minimum duration required.

Note: In the case of town mains and inexhaustible water supplies, the duration is implicit in the requirements for those supplies.

TB222.8.3 Choice of water supply

The water supplies shall be at least one of the following:

(1) town main in accordance with BS EN Clause 9.2;

(2) suction pump and tank in accordance with TB 222.8.4, TB 222.8.5 and TB 222.8.6;

(3) boosted town mains in accordance with BS EN Clause 9.2.2;

(4) elevated private reservoir;

(5) gravity tank.

TB222.8.4 Required water volume

The required water volume for the sprinkler installation shall be calculated by multiplying the maximum water flow demand by the duration specified in TB222.8.2.

TB222.8.5 Water source for suction pumps

The water source supplying suction or booster pumps shall be one of the following:

(1) a full capacity tank with an effective volume at least equal to the required water volume;

(2) two half capacity tanks with a total effective volume at least equal to the required water volume;

(3) a reduced capacity tank, where the required water volume is supplied jointly by the effective volume of the tank plus the automatic infill. The minimum effective volume of the reduced capacity tank shall be at least $20m^3$.

Note: Water storage tanks are usually referred to as cisterns by the water supply industry

TB222.8.6 Refill rates for suction tanks

The refill rates for full holding capacity suction tanks shall comply with BS EN Clause 9.3.3.

TB222.8.7 Testing of town mains

Where town mains are employed as direct connections or to supply reduced capacity holding tanks they shall be tested at:

(1) the preliminary or estimating stage as detailed in BS EN Clause 4.3; and

(2) at the commissioning stage, as detailed in BS EN Clause 19.1.3
(**Note:** BS EN Clause 20.2.2.5 is replaced by TB203.2.2.4);

(3) as part of a quarterly testing routine specified in TB203.3.3.3.

Both the user and the water supplier shall be made aware of the requirement to undertake flow tests during the design and commissioning of the sprinkler installation and as part of a maintenance schedule at quarterly intervals. If the practice of flow testing is not acceptable to any of the interested parties, town main direct connections or reduced capacity water storage tanks shall not be used.

TB222.9 TOWN MAINS

Where town mains are used either as a direct connection to a sprinkler system, or for infill to a reduced capacity tank or to a booster pump, the flow capacity of a town main shall not be assumed to be more than 75% of the measured capability at a time of lowest flow capacity.

Note: The lowest flow capacity of a town main may occur either at a time of the highest demand from users or may in some instances occur at night depending on the water suppliers' pressure management strategy.

TB222.10 PUMPS

The pump(s) shall be capable of providing pressures and flows that satisfy:

(1) the maximum demand flow (Table TB222.T4, Calculation 1) at the high flow condition (Table TB222.T3) for all water supply levels. The pump shall provide a pressure of at least 0,5bar higher than that required for the maximum demand flow conditions, when measured in the suppliers' test facility;

(2) the design density (Table TB222.T4, Calculation 2) at the high flow condition (Table TB222.T3) for all water supply levels;

(3) the minimum operating sprinkler pressure (Table TB222.T4, Calculation 3) at the low flow condition (Table TB222.T3), for the normal water level; and

(4) a pump nominal rating of at least 120% of the maximum demand flow (Table TB222.T4, Calculation 1) at the high flow condition, at a pressure of at least 50% of the maximum demand flow pressure requirement. The pump shall provide a pressure at least 0.5bar higher than that required, when measured in the suppliers' test facility. For suction pumps, a water supply at the normal level shall be used to determine the rating. In the case of booster pumps, a zero town main pressure shall be used.

TB222.11 SPACING AND LOCATION OF SPRINKLERS

TB222.11.1 Clearance beneath roof or ceiling sprinklers

A clear space of at least 1,0m shall be maintained below the deflector of roof or ceiling sprinklers.

TB222.11.2 Maximum area of coverage per sprinkler

The maximum area of coverage per sprinkler and spacings between sprinklers shall be in accordance with Table TB222.T5. Any sprinkler coverage or spacing recommendations or limitations specified in the suppliers' data sheet shall be complied with.

Table T222.T5 Maximum coverage and spacing between EPEC sprinklers

Hazard class	Maximum area per sprinkler m²	Maximum distances as shown in BS EN, Figure 8 m		
		Standard layout S and D	Staggered layout	
			S	D
OH10 OH12.5	≤ 16	4,2	4,6	5,3
	>16 ≤ 17,64	4,2	4.6	5,9

TB222.11.3 Minimum spacing of sprinklers

The minimum spacing between sprinklers shall not be less than 2,0m unless provisions are made to prevent cooling or wetting of adjacent sprinklers.

TB222.11.4 Location of sprinklers relative to building structure

The maximum distance from walls and partitions shall be:

- 2,1m for standard spacing;
- 2,3m for staggered spacing;
- 1,5m from the open face of open-faced buildings;
- 1,5m where the external walls are combustible or are metal, with or without combustible linings or insulating materials.

TB222.11.5 Distance of sprinklers below the ceiling

Sprinklers shall be installed in accordance with the suppliers' data sheet. Unless otherwise recommended, sprinkler deflectors shall be located between 30mm to 150mm below the underside of the ceiling or roof.

TB222.11.6 Sprinkler location relative to high level obstructions

Sprinklers shall be located at the horizontal distances from high level obstructions, such as light fittings, in accordance with Table TB222.T6 or Figure TB222.F1.

Table TB222.T6 Sprinkler location relative to a high level obstruction

Dimension 'a'. Minimum horizontal distance from sprinkler vertical axis to side of obstruction mm	Dimension 'b'. Maximum height of sprinkler deflector above the bottom of the obstruction mm
200	0
400	0
600	0
800	65
1000	180
1200	310
1400	450
1600	570
1800	700
2000	820

Note 1: See Figure TB222.F1 for relationship between sprinkler and obstruction.
Note 2: Dimensions may be interpolated, see Figure TB222.F2.

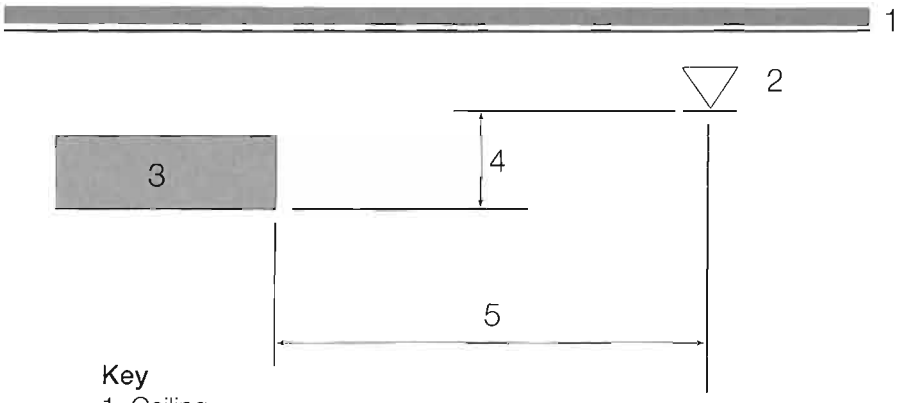

Key
1. Ceiling
2. Sprinkler
3. High level obstruction
4. Dimension 'b'. Maximum height of sprinkler deflector above (+) the bottom of the obstruction
5. Dimension 'a'. Minimum horizontal distance from sprinkler vertical axis to side of obstruction

Figure TB222.F.1 Relative position of sprinkler to high level obstructions

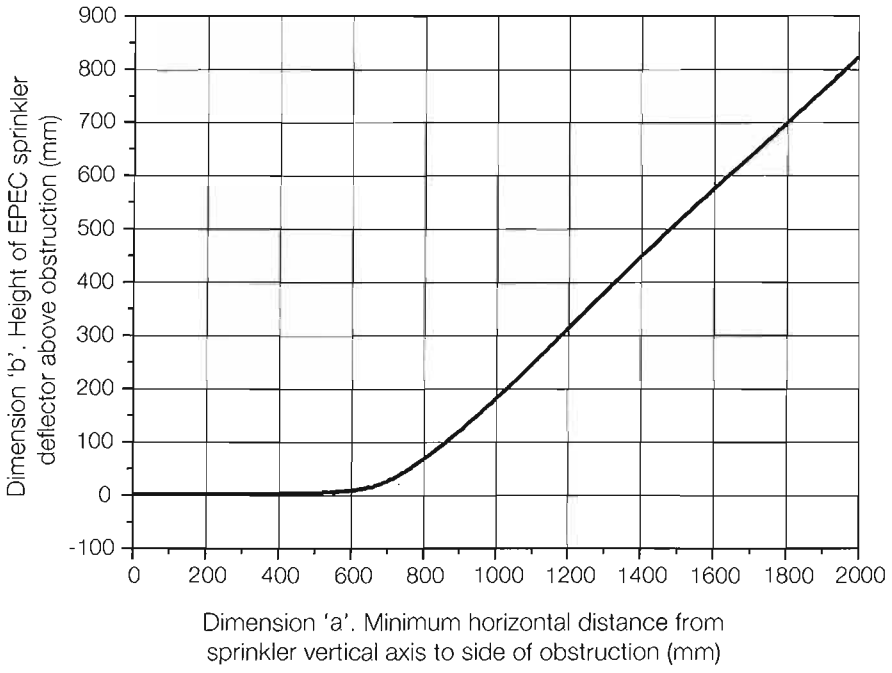

Note: See Figure TB222.F1 for relationship between sprinkler and obstruction.

Figure TB222.F.2 Distance of sprinkler deflector from high level obstructions

TB222.11.7 Low-level floor standing or suspended obstructions

The position of EPEC sprinklers relative to low level vertical obstructions, such as floor standing screens, moveable partitions or privacy curtains, shall be in accordance with Table TB222.T7 or Figure TB222.F4.

Table TB222.T7 Sprinkler location relative to low level floor standing or suspended vertical obstructions

Dimension 'd'. Horizontal distance from sprinkler vertical axis to far side of obstruction mm	Dimension 'h'. Minimum height of sprinkler deflector above (+) the top of the obstruction mm
0	1100
500	1700
1000	1700
1500	1100
1500	1100
2000	1100
2100	1100

Note 1: See Figure TB222.F3 for relationship between sprinkler and obstruction.
Note 2: Dimensions may be interpolated, see Figure TB222.F4.

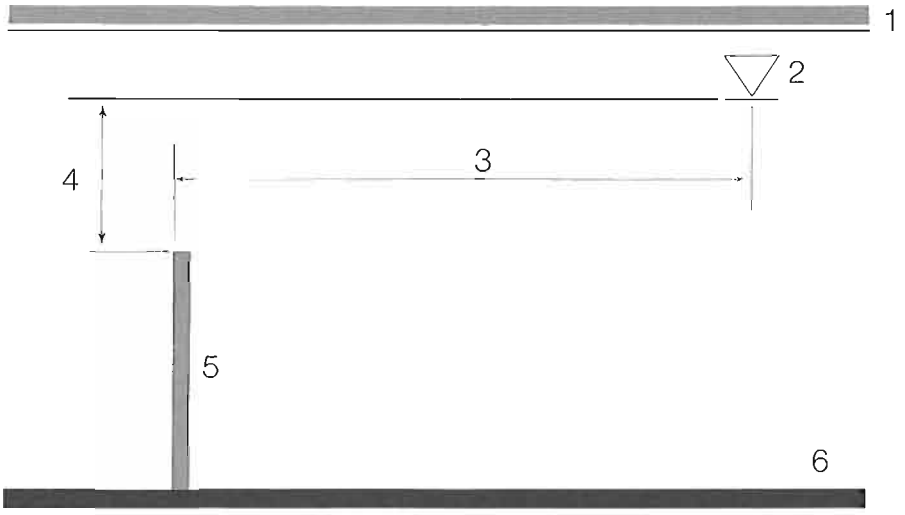

Key

1. Ceiling
2. Sprinkler
3. Dimension 'd'. Horizontal distance from sprinkler vertical axis to far side of obstruction
4. Dimension 'h'. Minimum height of sprinkler deflector above the top of the obstruction
5. Low level, floor-standing or suspended vertical obstruction
6. Floor

Figure TB222.F3 Relationship between sprinkler and low level, floor-standing or suspended vertical obstruction

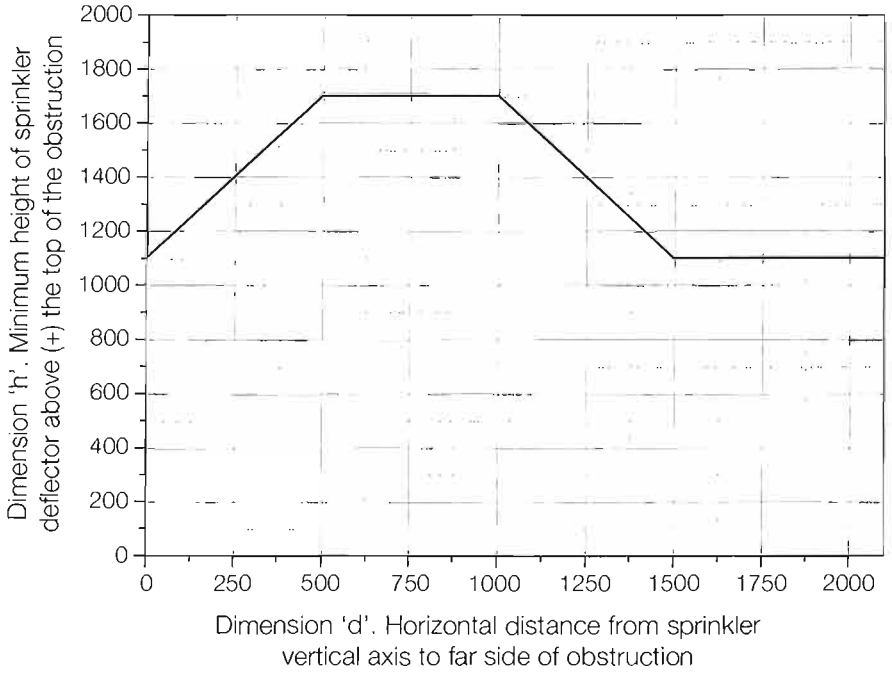

Note: See Figure TB222.F3 for relationship between sprinkler and obstruction

Figure TB222.F4 Sprinkler location relative to low level floor standing or suspended vertical obstruction (alternative to Table TB222.T7)

TB222.11.8 Wet-pipe installations

Sprinkler installations should preferably be of the wet-pipe type.

TB222.11.9 Dry-pipe installations

Where dry-pipe sprinkler protection is employed, the time for water to discharge from any open sprinkler in the installation shall not exceed 30 seconds.

TB222.11.10 Commissioning tests on dry-pipe installations

During the commissioning process, dry-pipe installations shall be tested to determine the water discharge time from a test valve, equivalent to an open sprinkler at the hydraulically most remote location on the installation.

Note: The remote test facility at the hydraulically most remote location on a distribution pipe may be used to test the water discharge time.

TB222.12 TEST VALVES AND FLUSHING CONNECTIONS

TB222.12.1 Remote test valve

A test facility shall be provided, incorporating a test valve with any associated fittings and pipework, delivering a flow equivalent to the discharge of a single sprinkler, connected to the hydraulically most remote location on a distribution pipe.

TB222.12.2 Flushing connections

Flushing connections, with or without permanently installed valves shall be fitted on the spur ends of the installation distribution pipes.

Flushing connections shall be the same nominal size as the distribution pipe and shall be fitted with a brass plug or cap.

Sprinkler protection of concealed spaces in OH3 EPEC sprinklered buildings

TB223.1 SCOPE

This Technical Bulletin has been produced for use in conjunction with TB222: *Ordinary Hazard Group 3 protection using Enhanced Protection Extended Coverage [EPEC] sprinklers*. Concealed space sprinkler protection is allowed at extended coverage providing specified criteria are met.

TB223.2 GENERAL

Where sprinkler protection is required in concealed ceiling or floor spaces in EPEC sprinkler protected buildings, the concealed space protection may be installed in accordance with either BS EN Clauses 5.4 and 17.3 or alternatively with the requirements of this Technical Bulletin.

This Technical Bulletin should only be used in conjunction with installations employing EPEC sprinkler protection in accordance with TB222.

This Technical Bulletin is based on research carried out for the Association of British Insurers by BRE, which showed that low height spaces could be satisfactorily sprinkler protected at extended areas of coverage providing the sprinklers are appropriately selected.

TB223.3 PROTECTION OF CONCEALED SPACES

If the height of the concealed space at the roof, ceiling or floor exceeds 0,8m, measured between:

(1) the underside of the roof and the top of the suspended ceiling; or

(2) the floor slab and the suspended ceiling; or

(3) between the underside of a raised floor and the top of the floor slab;

these spaces shall be sprinkler protected.

If the height of the concealed space is less than 0,8m, the space shall be sprinkler protected only if it is constructed of combustible materials or contains combustible materials. Electrical cables carrying voltage less than 250V, single-phase, with a maximum of 15 cables per tray, are permitted in concealed spaces.

TB223.4 SPRINKLER SPACING

In concealed spaces where the surface above the sprinklers protecting the space does not exceed a slope of 9½° (170mm/m), the sprinklers may be installed at a maximum area per sprinkler of 17,64m². Where the slope exceeds 9½°, the maximum area per sprinkler shall not exceed 12m². The maximum distance between adjacent sprinklers shall not exceed 4,2m.

The degree of obstruction in the concealed space shall also be considered when determining the spacing and positioning of sprinklers to protect the concealed space. In highly obstructed concealed spaces, the maximum area per sprinkler should not exceed 12m².

TB223.5 SPRINKLER SELECTION AND DESIGN CRITERIA

Sprinklers used in concealed spaces shall be in accordance with Table TB223.T1.

Table TB223.T1. Sprinkler selection and design details

Sprinkler pattern	Nominal k factor	Concealed space depth (m)	Design density (mm/min)	Minimum area of operation (m^2)
Conventional upright	80	<0,8	5,0	72
	115	<0,8	5,0	72
Conventional upright or pendent[1]	80	≥0,8 <2,4	5,0	72
	115	≥0,8 <2,4	5,0	72
Spray	80	≥2,4	5,0	72
	115	≥2,4	5,0	72
Approved ceiling or roof void sprinklers	(2)	(2)	(3)	(4)

Note 1: Upright sprinklers should be used where practicable. Upright sprinklers are usually more effective than pendent sprinklers where the height of the concealed space is restricted.
Note 2: Use in accordance with the suppliers' data sheet indicated in the approval listing.
Note 3: The suppliers' recommended value or 5,0mm/min, whichever is the greater.
Note 4: The minimum area of operation shall be 72m² or the suppliers' recommended value, whichever is the greater.

TB223.6 SPRINKLER THERMAL SENSITIVITY

Sprinklers used to protect concealed spaces may have a 'standard' or 'special' or 'quick' response thermal sensitivity rating. Sprinklers protecting ceiling ventilation intake plenums should have a 'standard' response thermal sensitivity rating.

TB223.7 PIPEWORK

The sprinklers protecting a concealed space may be fed from separate pipework or the pipework serving an adjoining room. Whichever pipework arrangement is used, the pipework shall be sized by hydraulic calculation.

Where combustible materials are used in the construction of the concealed space, or where there is open communication between the protected room and concealed space (for example, sprinkler protected ventilation plenums), simultaneous operation of sprinklers in the concealed space and the concomitant room shall be assumed when determining pipe sizes and pressure/flow characteristics of the installation. Where non-combustible materials are used in the construction of the concealed space and there is no communication between the protected space and the room, simultaneous operation need not be assumed.

TB223.8 REFERENCE

- BRE Client report No 203962: *Evaluation of the distribution performance of two sprinklers in voids of 500mm and 2000mm in height.*

Sprinkler water storage tanks (cisterns)

Relates to BS EN Clauses 9.3 and 9.6

TB224.1 INTRODUCTION

This Technical Bulletin reintroduces water storage tank selection criteria, similar to those in BS 5306-2, which have not been included in BS EN 12845.

Fabricated 'approved' tanks, concrete tanks and tanks of other unspecified methods of construction are referred to in the Technical Bulletin.

Traditionally the sprinkler industry has referred to 'suction tanks', a product which the water supply industry usually refers to as cisterns. Throughout this Technical Bulletin the terms water storage tank and suction tanks have been used.

TB224.2 SCOPE

This Technical Bulletin specifies requirements and gives recommendations for the design, construction and selection of water storage tanks. For property protection purposes compliance with the Technical Bulletin may be required by insurers to ensure a reliable source of stored water.

TB224.3 DEFINITIONS

TB224.3.1 Tank, water storage

A receptacle for the storage of water, configured either as a tank to provide water to a suction pump or under gravity to the installation with or without a booster pump.

TB224.3.2 Approved water storage tank

A suction or gravity tank, with a listed volumetric range, complete with all necessary fittings complying with and certificated to LPS 1276 or equivalent.

TB224.3.3 Three-year tank

A suction tank designed and protected against corrosion such that the need for emptying the tank for maintenance is reduced to a period of not less than three years.

TB224.3.4 Ten-year tank

A suction tank designed and protected against corrosion such that the need for emptying the tank for maintenance is reduced to a period of not less than ten years.

TB224.4 TYPES OF STORAGE TANKS (CISTERNS)

Three types of storage tanks are recognised in this Technical Bulletin:

TB224.4.1 Type 1 water storage tank

An approved 'ten-year tank' of appropriate capacity.

TB224.4.2 Type 2 water storage tank

A concrete tank of appropriate capacity, designed and constructed in accordance with BS 8007: 1987: *Code of practice for design of concrete structures for retaining aqueous liquids*; with a rigid roof of concrete, metal, glass reinforced concrete or similar suitable materials of construction, which excludes light, animals and extraneous matter, with suitable furniture and fittings making it suitable for sprinkler service. All exposed steelwork shall be appropriately protected against corrosion.

TB224.4.3 Type 3 water storage tank

An approved 'three-year tank' of appropriate capacity.

TB224.5 REDUCED CAPACITY WATER STORAGE TANKS

Where reduced capacity tanks are used in accordance with BS EN Clause 9.3.4 (see also TB229.3.5), the town main connection to a reduced capacity tank dependent on inflow, shall be:

(a) reserved solely for the tank and shall be provided with a bypass line fitted with a dedicated direct reading flow meter; and

(b) subject to a written agreement between the user and the water supply company that it is permissible to test the capacity of inflow at six monthly intervals in accordance with TB203.3.3.3.

COMMENTARY AND RECOMMENDATIONS ON TB224.5

If it is not possible to obtain a written agreement from the water supplying company, at the design stage, agreeing that the user or his agent may undertake quarterly inflow tests at the infill maximum demand flow, a reduced capacity water storage tank dependent on inflow should not be used.

TB224.6 CHOICE OF WATER SUPPLIES

In addition to the water supplies identified in BS EN Clause 9.6, the following arrangement of water supplies may be employed:

TB224.6.1 Superior twin water supplies

Superior twin water supplies shall consist of the following:

(a) two full capacity automatic suction pumps drawing water from:

  (i) two half capacity pump suction tanks; or

  (ii) one half capacity pump suction tank plus one reduced capacity pump suction tank complying with BS EN Clause 9.3.4 (see also TB229.3.5);

(b) three half capacity automatic suction pumps drawing water from

  (i) two half capacity pump suction tanks; or

  (ii) one half capacity pump suction tank plus one reduced capacity pump suction tank complying with BS EN Clause 9.3.4 (see also TB229.3.5);

(c) two full capacity automatic booster pumps drawing water from two half capacity gravity water storage tanks; or

(d) three half capacity automatic booster pumps drawing water from two half capacity gravity water storage tanks; or

(e) two half capacity gravity tanks.

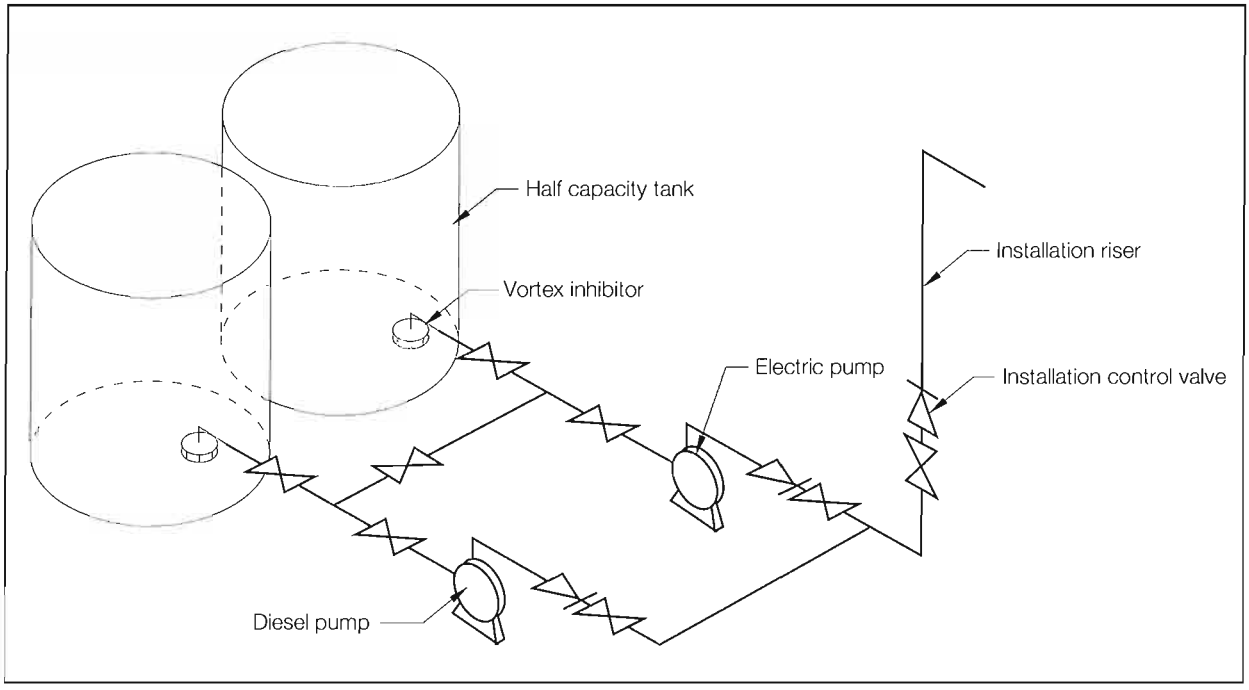

Figure TB224.F1 Superior twin water supply with two suction pump connections to two half capacity tanks

COMMENTARY AND RECOMMENDATIONS ON TB224.6

Within the United Kingdom fire insurers may consider 'superior twin water supplies' to be equivalent to duplicate water supplies for underwriting purposes. Where life safety requirements apply the authority having jurisdiction should be consulted before specifying a superior twin water supply.

Figure TB224.F1 illustrates a typical superior twin water supply employing two full capacity pumps and two half capacity water storage tanks.

TB224.7 WATER STORAGE TANK SELECTION

Water storage tanks shall be selected in accordance with Table TB224.T1.

Table TB224.T.1 Water storage tank selection

Water supply classification	Water storage tank Type (Ref TB224.4)		
	Type 1	Type 2	Type 3
Single water supply	Suitable	Suitable	Not preferred[1]
Superior water supply[2]	Suitable	Suitable	Not preferred[1]
Superior twin water supply[3]	Suitable[4]	Suitable[4]	Not acceptable
Duplicate water supply	Suitable	Suitable	Suitable

Note 1: Type 3 tanks may be used but they are not the preferred choice for property protection purposes as they may require more maintenance than Types 1 and 2 water storage tanks.
Note 2: Not including a superior twin water supply.
Note 3: Not including a superior water supply which does not qualify as a superior twin water supply.
Note 4: Both half capacity tanks of a superior twin water supply should be either Type 1 or Type 2 tanks.

TB224.8 VORTEX INHIBITORS

Where vortex inhibitors are used (see BS EN Clause 9.3.5) on the suction pipe inlets in pump suction tanks only vortex inhibitors with upper and lower flanges shall be used. Vortex inhibitors shall be approved by an accredited third party product certification body.

TB224.9 PUBLICATIONS REFERRED TO

- LPS 1276: Issue 1.1 – *Requirements for the LPCB Certification and Listing of Above Ground Suction Tanks for Sprinkler Systems*. BRE Global Limited.
- BS 5306-2: 1990, *Fire extinguishing installations and equipment on premises: Specification for sprinkler systems*, British Standards Institution.
- BS 8007: 1987, *Code of practice for design of concrete structures for retaining aqueous liquids*, British Standards Institution.

BS EN 12845: 2004

TB225 has been withdrawn due to the publication of BS EN 12845: 2004 + A2: 2009 as the core document to these Rules

Design, installation and maintenance of underground pump chambers

Relates to BS EN 9.3 and 9.6

TB226.1 INTRODUCTION

Underground pump chambers will require periodic manning for testing, checking and maintenance purposes. Such spaces may be dangerous to work in and classified as confined spaces under the Confined Spaces Regulations 1997. The personnel safety issues could result in unsatisfactory maintenance practices, which may make working in the underground pump chamber even more hazardous. To ensure safe working, it is essential that the pump chambers and the systems they contain are designed with safety in mind and that all the installation and maintenance processes are carefully devised and documented during the design stage, in advance of the installation process.

In some instances, underground water storage tanks and pump chambers are considered for sprinkler service owing to a shortage of space in which to locate above-ground facilities. If at all possible, underground pump chambers should be avoided. Where selection of an underground tank is considered essential, consideration should be given to the use of submersible pumps in the first instance.

Where the use of underground water storage tanks or pump chambers is proposed, it is essential that all stakeholders are aware of their potential responsibilities under the Confined Spaces Regulations before the sprinkler installation contract is let.

The purchaser of the sprinkler protection should also be made aware that underground pump chambers will be more costly to install and maintain in a satisfactory condition than above-ground facilities.

Where the sprinkler protection is provided for property protection purposes, the fire insurer will make periodic inspection and testing by an appropriately qualified and equipped sprinkler contractor a condition of the fire insurance policy. Underground pump chambers may require more frequent checking than above-ground facilities and continuous monitoring, owing to the potential for adverse environmental conditions within the pump chamber and the risk of flooding.

The prospective system owner should consider that not all approved sprinkler contractors will be appropriately qualified to install or maintain underground pump chambers and may decline invitations to tender for contracts. It will be the sprinkler system owners' responsibility to verify that service and maintenance contracts are let to appropriately trained, qualified, equipped and experienced contractors.

Failure to correctly maintain the sprinkler system in good working order may invalidate the fire insurance for the property.

TB226.2 SCOPE

This Technical Bulletin specifies requirements and gives recommendations for the design, installation and maintenance of underground pump chambers for sprinkler pumps.

TB226.3 RESPONSIBILITIES

It is the responsibility of the sprinkler installing company and the sprinkler system owner to ensure that they comply with the relevant legal requirements during the installation and use of underground services referred to in this Technical Bulletin. The relevant laws may include the:

- Confined Spaces Regulations 1997;
- Management of Health and Safety at Work Regulations 1999;
- Control of Substances Hazardous to Health Regulations 2002;
- Personal Protective Equipments at Work Regulations 1992;
- Provision and Use of Work Equipment Regulations 1998;
- Electricity at Work Regulations 1989;
- Workplace (Health, Safety and Welfare) Regulations 1992.

Compliance with this Technical Bulletin should not be considered to be proof of compliance with relevant laws.

COMMENTARY AND RECOMMENDATIONS ON TB226.3

Guidance on confined spaces is given in the FPA publication *Guide on working in confined spaces* (see Part 3: 'Supplementary information').

TB226.4 DEFINITIONS

TB226.4.1 Confined space

See the Confined Spaces Regulations 1997.

TB226.4.2 Underground pump chamber

An underground enclosure housing a sprinkler pump or pumps and other materials and equipment associated with sprinkler pump rooms which are classified as a confined space and include the following features:

- access is restricted and may be by means of a ladder;
- water leakage or seepage could result in flooding of the pump chamber;
- precautionary measures are required to prevent the build-up of gases or vapours or reduction in oxygen levels;
- pump chambers directly attached to underground water storage cisterns.

TB226.5 ADDITIONAL CONTRACT PLANNING AND DOCUMENTATION

(Additional to BS EN Section 4)

When preparing the outline design for the installation, a statement shall be prepared indicating how underground pump chambers may influence the performance of the sprinkler system, as required by BS EN Clause 4.2. The statement shall include the following:

(a) an outline of measures which are required for the safe and reliable installation and upkeep of the underground facilities, including:

1. evidence that the location is not susceptible to flooding;
2. details of existing and proposed drainage systems external to the pump chamber;

3. special additional requirements for underground facilities such as forced ventilation, drainage paths within the chamber, automatic drainage pump and controls, measures to control humidity within the chamber, thermostatically controlled heating, permanent electric lighting, high-water level warning, remote monitoring and connection to a central station for fault and fire alarm signalling;
4. where flammable liquids, such as diesel fuel, are stored or used within the pump house, a risk assessment and method statement relating to the handling, use and actions should there be a spillage of the flammable liquid should be prepared at the estimating stage;
5. description of the means of carrying out weekly testing and the details of the competent company or persons who will undertake the task;
6. requirement for periodic maintenance and servicing by an appropriately qualified and equipped approved sprinkler contractor;
7. legal responsibilities for the safe upkeep of facilities in compliance with the Confined Spaces Regulations 1997;
8. proposed facilities for third-party inspectors and surveyors to inspect the pump chamber, water supply controls, instrumentation and witness flow tests without the need to enter the pump chamber;

(b) the summary schedule shall include the following information:

1. the internal dimensions of the underground pump chamber;
2. a description of the access to any underground tank or pump chamber, including dimensions of the access;
3. physical methods and procedures to be employed to control access to confined spaces.

TB226.6 UNDERGROUND PUMP CHAMBER INTERIOR AND EQUIPMENT

TB226.6.1 Pump chamber dimensions

There shall be sufficient space and headroom within the pump chamber interior to carry out installation, servicing and maintenance safely, including the removal and replacement of major items of equipment.

TB226.6.2 Chamber access

A lockable access hatch or door shall be provided to the chamber with a permanent and safe means of access to the chamber interior.

The opening shall be suitably located and of sufficient dimensions to permit easy access of personnel and the removal and replacement of equipment within the chamber.

When closed, the hatch or door shall be tightly sealed, to exclude water flora and fauna.

There shall be a means of avoiding chamber occupants from being locked in.

TB226.6.3 Pump chamber electrical apparatus

All electrical apparatus within the enclosure shall be flameproof and have an enclosure rating of at least IP66.

Handheld electrical apparatus such as lamps, communicators and cameras shall be flameproof or intrinsically safe and have an enclosure rating of at least IP 66.

TB226.6.4 Pump chamber ventilation

A permanent ventilation system, with above ground inlet and outlet ventilators with a capacity of at least 10 air changes per day shall be installed. The ventilation system shall scavenge air at high and low levels within the chamber. Inlet and outlet ventilators shall be designed to exclude water, flora and fauna.

TB226.6.5 Pump chamber lighting

The pump chamber shall be equipped with a permanent lighting system.

COMMENTARY AND RECOMMENDATIONS ON TB226.6.5

The lighting level, throughout the chamber, should be at least 500lux.

TB226.6.6 Pump chamber floor and waste water drainage

A solid concrete floor and pump plinth shall be provided with a drainage slope or gullies to a sump to collect loose water. A permanently installed and appropriately fixed self-priming drainage pump of an appropriate capacity shall be fitted to draw water from the sump. The waste water shall be discharged through permanent pipework to an outlet external to the pump chamber. The drainage pump shall operate automatically, controlled by a water level sensor or other appropriate device.

Where diesel fuel is used within the pump house, waste water should be discharged to a waste water bund or separator for safe disposal.

COMMENTARY AND RECOMMENDATIONS ON TB226.6.6

The drainage pump should be appropriately located and fixed to mitigate vibration and ensure correct operation of the pump starting device.

TB226.6.7 Pump chamber test valves drain valves, controls and gauging

Where appropriate, test valves, controls and gauging should be located outside the pump chamber.

Where tests valves are located within the chamber, any outlet shall be located outside the chamber. Waste water shall discharge into a drainage system which is fit for the purpose, such that water cannot enter the pump chamber.

Pump chamber pipework low level drains shall not exceed 15mm diameter. Any pipe or equipment drain outlets which discharge into the pump chamber shall only drain pipework and equipment contained within the pump chamber. These drains shall discharge directly into the sump.

The maximum outflow from all the drain outlets within the pump chamber, operating simultaneously, shall not exceed the capacity of the sump drainage pump.

Pipework and fittings external to the pump chamber shall be configured such that they may be drained externally to the pump chamber.

Installation control and alarm valves shall be installed in a readily accessible location and shall not be located in the underground pump chamber.

TB226.6.8 Third-party inspections and witnessing of tests

Means shall be available for third-party assessors to examine the pump chamber and equipment contained within it without the need to enter the pump chamber.

Where essential controls and gauging – such as pressure gauges and flow test apparatus – are located within the pump chamber, means shall be made available for third-party assessors to view instrumentation and witness flow tests without the need to enter the pump chamber.

TB226.6.9 Pipework within the pump chamber

Each pipe within the pump chamber shall be independently supported and shall not rely on other pipes or connectors for support.

TB226.6.10 Chamber high-water level indicator

A device to detect the presence of liquids shall be located at a suitable location above the sump high-water level to provide an alarm should the pump fail or water leakage into the chamber exceed the drainage pump capacity. The high-level alarm signal shall be transmitted to a permanently manned location.

TB226.6.11 Fuel storage

Diesel pumpset fuel tanks within underground pump chambers, including any filling connections, shall be bunded. Fuel – other than that contained in the pumpset fuel tank but including top-up fuel for diesel pumps – shall not be stored in the pump chamber.

TB226.6.12 Communications

An appropriate and reliable communication system shall be available between those inside the pump chamber and those outside the pump chamber.

TB226.7 PUMP CHAMBER MONITORING

TB226.7.1 Alarms and indication

The sprinkler system monitoring shall comply with BS EN Annex H. Additional monitoring shall be provided to give alarms or indications that the pump chamber:

(a) stop valves which control flow to the sprinkler installation are set fully open;

(b) drainage pump is operating;

(c) high-water level has been exceeded; and

(d) temperature is below the permitted minimum.

COMMENTARY AND RECOMMENDATIONS ON TB226.7.1

Continuous permanent monitoring of oxygen concentrations or the presence of toxic or flammable gases may be required. It is the users' responsibility to determine whether continuous monitoring is necessary. The procedures for entry into the pump chamber should include a period of gas monitoring prior to entry. The gases measured should depend upon the likely hazard, but at least the following gases should be measured at high and low levels within the chamber prior to entry by personnel:

- hydrogen sulphide, H_2S;
- oxygen, O_2;
- methane, CH_4;

and where a diesel engine is present, or if appropriate:

- carbon dioxide, CO_2;
- carbon monoxide, CO;

The procedures should clearly indicate the safe conditions for entry, and gas monitoring should continue whilst the chamber is occupied.

Consideration should be given to requiring that all personnel entering the pump chamber should wear breathing apparatus.

TB226.7.2 Indicator panels and alarms

The alarms and indicators shall be connected to an alarm and indicator panel, above ground, in a normally attended location. Fire and fault alarms shall be transmitted to a permanently manned location in accordance with BS EN Annex I.

COMMENTARY AND RECOMMENDATIONS ON TB226.7.2

Where there is no permanently manned location on site, the alarms should be transmitted to a central alarm station.

TB226.8 ADDITIONAL MATERIALS TO BE PROVIDED WITH COMPLETION CERTIFICATE AND DOCUMENTS

(Additional to BS EN Clause 19.2)

The installer of the system shall provide the user with the following additional documentation:

(a) a set of user instructions for underground water storage tanks and pump chambers, as appropriate, which shall include details of the maintenance programme;

(b) a written risk assessment for typical routine work to be carried out in confined spaces;

(c) a written method statement for typical routine maintenance work to be carried out in confined spaces;

(d) an agreed procedure for undertaking any work not covered by the written risk assessments and method statements;

(e) a typical work permit for authorisation of routine work to be carried out in confined spaces;

(f) written procedure for obtaining work permit authorisation;

(g) written procedure for an independent third-party evaluation of the condition of any confined space and the equipment within the confined space and verification of the performance equipment it contains.

Note: The procedures should be devised such that the third-party assessor is not required to enter a confined space and has confidence in the information made available (see the FPA publication *Guide on working in confined spaces* for further advice (see Part 3: 'Supplementary Information')).

TB226.9 PUBLICATIONS REFERRED TO

- Confined Spaces Regulations 1997.
- Management of Health and Safety at Work Regulations.
- Control of Substances Hazardous to Health Regulations 2002.
- Personal Protective Equipment at Work Regulations 1992.
- Provision and Use of Work Equipment Regulations 1998.
- Electricity at Work Regulations 1989.
- Workplace (Health, Safety and Welfare) Regulation 1992.

Pipework

Supplements BS EN Clause 17, replaces TB211 and TB212

TB227.1 INTRODUCTION

BS EN 12845 makes reference to the use of above-ground steel piping to ISO 65. Previous practice has been to use steel tube to BS 1387. BS EN 10255 is a new European standard specifying technical delivery requirements for a range of general purpose steel tubes, and is for most practical purposes little different to products, complying with BS 1387, which it replaces. The mean internal diameters are, however, slightly different and the bore diameters which are given for BS EN 10255 tube in this Technical Bulletin are slightly different to those previously stated for BS 1387 tube.

The following list gives corresponding types of tubes for three standards:

BS 1387	ISO 65	BS EN 10255
Light	L2	L2
Medium	Medium	Medium
Heavy	Heavy	Heavy

Details are also included within the Technical Bulletin of other piping systems, such as coppers, plastic, stainless steel and proprietary products, with details of any conditions for their use. The installation practices for pipework in BS EN 12845, such as pipe hanging requirements, assume steel pipe equivalent to ISO 65 will be used. Where pipework other than ISO 65 or equivalent is used, it is the responsibility of the supplier to provide the appropriate guidance for the product supplied and the installing company's responsibility to ensure that the product is appropriate for the intended use and that the suppliers' instructions are followed.

TB227.2 PIPES AND FITTINGS

TB227.2.1 General

Pipes and pipe fittings shall comply with the specifications identified in Table TB227.T1.

Table TB227.T1 Specifications for pipes and fittings			
Application	Pipe	Fittings	Comments
Below ground	BS 1387[1]		Heavy grade, galvanised
	BS EN 10255		Heavy series, galvanised
	BS EN 545		
	BS 4622	BS 4622	
	BS EN 10217-1		
	BS EN 1057	BS EN 545	
	BS EN 12201-2	BS EN 12201-3	
		BS EN 12201-3[2]	For PE 100 (HPPE), the SDR shall be not more than 13,6. For PE 80 (MDPE), the SDR shall be not more than 11
Above ground, upstream of the alarm valve	BS 1387[1]		
	BS EN 10255	BS 143 and 1256 BS EN 10241	BS EN 10226-1: 2004: *Pipe joints where pressure tight joints are made on threads. Taper external threads and parallel internal threads*
		BS EN 10242	
		BS 2035	
		LPS 1219-3.0	
	BS EN 10217-1		
	BS 2035		
Above ground, downstream of the alarm valve	BS 1387[1]		
	BS EN 10255	BS 143 and 1256 BS EN 10241 BS EN 10242	BS EN 10226-1: 2004: *Pipe joints where pressure tight joints are made on threads. Taper external threads and parallel internal threads*
		LPS 1219-2.2	
	BS EN 545	BS EN 545	
	BS EN 10216-2		
	BS EN 10216-5		
	BS EN 10217-2		
	BS EN 10217-3		
	BS EN 10217-5		
	BS EN 10217-7		
	BS 4622	BS 4622	
	BS EN 1057	BS EN 1254-1	
		BS EN 1254-2	
		LPS 1219	See TB227.2.3
	LPS 1261		See TB227.2.4
	Proprietary products	Proprietary products	See TB227.2.5
	LPS 1260	LPS 1260	See TB227.2.6

Note 1: BS 1387 is obsolete and is replaced by BS EN 10255.
Note 2: Blue PE pipe is used for potable water; black PE pipe is used for non-potable water.

TB227

TB227.2.2 Calculation of pipework losses in steel tube to BS EN 10255

Friction pressure losses in pipes shall not be less than those derived from the Hazen-Williams formula:

$$p = \frac{6{,}05 \times 10^5}{C^{1.85} \times d^{4.87}} \times L \times Q^{1.85}$$

For pipes for which the appropriate k value is given (as in Table TB 227.T2), the formula can be simplified to:

$P = k \times L \times Q^{1.85}$

Where p is the loss of pressure in pipe (in bar);

Q is the flow rate through the pipe (in ℓ/min);

d is the mean bore of the pipe (in mm) (see Table TB227.T2);

C is a constant for the type of the pipe;

k is a constant for the size and the type of pipe (see Table TB227.T2);

L is the equivalent length of pipe and fittings (in m).

TB227.T2 BS EN 10255 Non-alloy steel tubes suitable for welding, threading and grooving

EN 10255 Specified outside diameter	Nominal diameter[1] (DN)	Thread size[2]	EN 10255 L2 ISO 65 L2 Replacing BS 1387 – Light		EN 10255 Medium series ISO 65 M replacing BS 1387 – Medium		EN 10255 Heavy series ISO 65 H replacing BS 1387 – Heavy	
mm	mm	inch	Mean size		Mean size		Mean size	
			mm	Value of k	mm	Value of k	mm	Value of k
			NON-GALVANISED					
26,9	20	¾	22,05	$2{,}47 \times 10^{-5}$	21,70	$2{,}67 \times 10^{-5}$	20,50	$3{,}52 \times 10^{-5}$
33,7	25	1	27,70	$8{,}14 \times 10^{-6}$	27,35	$8{,}66 \times 10^{-6}$	25,75	$1{,}16 \times 10^{-5}$
42,4	32	1¼	36,40	$2{,}15 \times 10^{-6}$	36,05	$2{,}25 \times 10^{-6}$	34,45	$2{,}81 \times 10^{-6}$
48,3	40	1½	42,30	$1{,}04 \times 10^{-6}$	41,95	$1{,}08 \times 10^{-6}$	40,35	$1{,}30 \times 10^{-6}$
60,3	50	2	53,50	$3{,}30 \times 10^{-7}$	53,05	$3{,}44 \times 10^{-7}$	51,25	$4{,}07 \times 10^{-7}$
76,1	65	2½	69,20	$9{,}42 \times 10^{-8}$	68,75	$9{,}72 \times 10^{-8}$	66,95	$1{,}11 \times 10^{-7}$
88,9	80	3	81,10	$4{,}35 \times 10^{-8}$	80,75	$4{,}44 \times 10^{-8}$	78,75	$5{,}02 \times 10^{-8}$
114,3	100	4	105,45	$1{,}21 \times 10^{-8}$	105,05	$1{,}23 \times 10^{-8}$	103,25	$1{,}34 \times 10^{-8}$
165,1	150	6			155,20	$1{,}84 \times 10^{-9}$	154,40	$1{,}89 \times 10^{-9}$
			GALVANISED					
26,9	20	¾	21,88	$2{,}57 \times 10^{-5}$	21,53	$2{,}78 \times 10^{-5}$	20,33	$3{,}67 \times 10^{-5}$
33,7	25	1	27,53	$8{,}38 \times 10^{-6}$	27,18	$8{,}92 \times 10^{-6}$	25,58	$1{,}20 \times 10^{-5}$
42,4	32	1¼	36,23	$2{,}20 \times 10^{-6}$	35,88	$2{,}31 \times 10^{-6}$	34,28	$2{,}88 \times 10^{-6}$
48,3	40	1½	42,13	$1{,}06 \times 10^{-6}$	41,78	$1{,}10 \times 10^{-6}$	40,18	$1{,}33 \times 10^{-6}$
60,3	50	2	53,33	$3{,}35 \times 10^{-7}$	52,88	$3{,}49 \times 10^{-7}$	51,08	$4{,}13 \times 10^{-7}$
76,1	65	2½	69,03	$9{,}53 \times 10^{-8}$	68,58	$9{,}84 \times 10^{-8}$	66,78	$1{,}12 \times 10^{-7}$
88,9	80	3	80,93	$4{,}39 \times 10^{-8}$	80,58	$4{,}49 \times 10^{-8}$	78,58	$5{,}07 \times 10^{-8}$
114,3	100	4	105,28	$1{,}22 \times 10^{-8}$	104,88	$1{,}24 \times 10^{-9}$	103,08	$1{,}35 \times 10^{-8}$
165,1	150	6			155,03	$1{,}85 \times 10^{-9}$	154,23	$1{,}90 \times 10^{-9}$

Note 1: Nominal diameter correlation given in EN 10255 Annex A.
Note 2: Thread designation for EN 10255 and BS 1387.

TB227.2.3 Mechanical couplings (no equivalent BS EN clause)

Only mechanical pipe couplings complying with LPS 1219 or equivalent shall be used. The products shall be suitable for sprinkler service and be:

(a) listed in a notified body specifiers' guide or amendments; or

(b) approved and listed in the LPCB's *List of approved fire and security products and services* (or any amendments to it), see *http://www.redbooklive.com/*.

Mechanical pipe couplings shall be installed in accordance with the suppliers' recommendations.

It is the installers' responsibility to ensure that the coupling is appropriate for the pipe used and that the connecting pipe ends are appropriately prepared.

TB227.2.4 Flexible connectors for connecting single sprinklers to range pipes (no equivalent BS EN clauses)

TB227.2.4.1 Only flexible connectors complying with LPS 1261 or equivalent shall be used. The products shall be suitable for sprinkler service and be listed in a notified body specifiers' guide or amendments.

TB227.2.4.2 All flexible connectors shall comply with the following requirements:

(a) flexible connector installations shall comply with suppliers' instructions and shall not exceed any limitations of use stated in their certification listing;

(b) flexible connectors shall be used on wet pipe installations only;

(c) the total aggregate bend angle shall not exceed the value stated in the product certification listing;

(d) all flexible connector sprinkler terminations shall be supported by a product suppliers' certificated support bracket assembly;

(e) a flexible connector of an appropriate length shall be used. Pipe bending to reduce the effective flexible connector length is not permissible;

(f) flexible connectors shall only be used to connect a single sprinkler to a distribution pipe;

(g) only one flexible connector shall be used to connect a sprinkler and shall have a total flexible pipe length, including connectors, not exceeding 1220mm;

(h) where the distribution pipe outlet is on the top of the distribution pipe the flexible pipe shall follow a 180° arc before falling vertically towards the sprinkler. For all other connection locations on the distribution pipe, the flexible connector may run either horizontally or be inclined towards the sprinkler termination location;

(i) flexible connector bend radii shall not be smaller than the specified minimum bend radius for the product identified in the product certification listing and all bends greater than 45° shall be fitted with a minimum radius indicator;

(j) any flexible connector which is damaged or kinked shall be replaced;

(k) flexible connectors shall only be used in accessible locations where third-party inspections are permissible.

COMMENTARY AND RECOMMENDATIONS ON TB227.2.4.2

Diagrams of acceptable and unacceptable flexible connector configurations are given in Figure TB227.F1

TB227.2.5 **Flexible connectors used in pre-calculated systems shall:**

(a) connect single sprinklers to distribution pipes with a minimum distribution pipe diameter of 32mm;

(b) be coupled to distribution pipes using 32mm DN (1¼in thread) fittings.

TB227.2.6 **Proprietary pipes and fittings (no equivalent BS EN clause)**

TB227.2.6.1 Proprietary pipes and fittings other than those identified in TB227.2.3, TB227.2.4 and TB227.2.6 may be acceptable for use, providing the products are suitable for sprinkler service and are:

(a) listed in a notified body specifiers' guide or amendments; or

(b) approved and listed in the LPCB's *List of approved fire and security products and services* (or any amendments to it), see *http://www.redbooklive.com/*; and

(c) have an agreed FPA-endorsed product user guide available from the supplier and supplied with the products.

Note: FPA-endorsed product guides are available for downloading or from a link at *http://www.thefpa.co.uk/Resources/FPA+Sprinkler+Rules.htm* on the FPA website. If a guide is not available for downloading or there is no link on the website where it may be downloaded, it has not been endorsed by the FPA.

Flexible pipes and joints, other than the products described in TB227.2.3 and TB227.2.4 shall comply with BS EN Clause 17.1.4.

TB227.2.7 **Plastic pipe suitable for sprinkler service to LPS 1260 or equivalent (no equivalent BS EN clauses)**

TB227.2.7.1 Only plastic pipe suitable for sprinkler service satisfying LPS 1260 or equivalent shall be used which is approved and are:

(a) listed in a notified body specifiers' guide or amendments; or

(b) approved and listed in the LPCB's *List of approved fire and security products and services* (or any amendments to it), see *http://www.redbooklive.com/*; and

(c) has an agreed and FPA endorsed product user guide available for downloading or from a link at *http://www.thefpa.co.uk/Resources/FPA+Sprinkler+Rules.htm*. If a guide is not available for downloading or there is no link to a website where it may be downloaded, it has not been endorsed by the FPA.

TB227.2.7.2 Use of plastic pipe shall be limited to:

(a) wet pipe installations;

(b) hydraulically calculated pipework installations;

(c) installations employing quick-response sprinklers;

(d) in ceiling voids where sprinkler protection is not required within the void;

(e) occupancies identified in Table TB 227.T3;

(f) occupancies and uses recommended by the supplier.

TB227.2.7.3 Plastic pipe shall not be used:

(a) in floor or ceiling spaces which are used as ventilation plenums or reservoirs;

(b) in corrosive atmospheres unless agreed with the pipe supplier.

TB227.2.7.4 *Exposure of plastic pipe*

The use of exposed plastic pipe is not recommended. Where plastic pipework is exposed it is done so at the responsibility of the installing company.

COMMENTARY AND RECOMMENDATIONS ON TB227.2.7.4

Plastic pipe should be concealed and be protected by at least the equivalent of:

(a) one layer of 10mm gypsum wallboard;

(b) suspended ceiling weighing not less than 1,7kg/m^2;

(c) 12mm plywood soffit; or

(d) protection having at least 30 minutes' fire resistance.

Table TB227.T3 Occupancies in which approved plastic pipe may be used

Occupancies	Hazard classification
Schools, colleges and other educational institutions	LH or OH1
Offices, excluding store rooms	LH or OH1
Hotels, excluding kitchens, plant and store rooms	OH1
Hospitals, excluding kitchens, plant, store and laundry rooms	OH1
Museums, excluding store rooms	OH1
Libraries, excluding areas in which plastic materials are stored and stock rooms	OH1
Court rooms	OH1
Nursing homes	OH1
Data processing rooms	OH1
Prisons	OH1
Churches	LH or OH1
Restaurant dining areas	OH1
Attics, without storage	LH or OH1

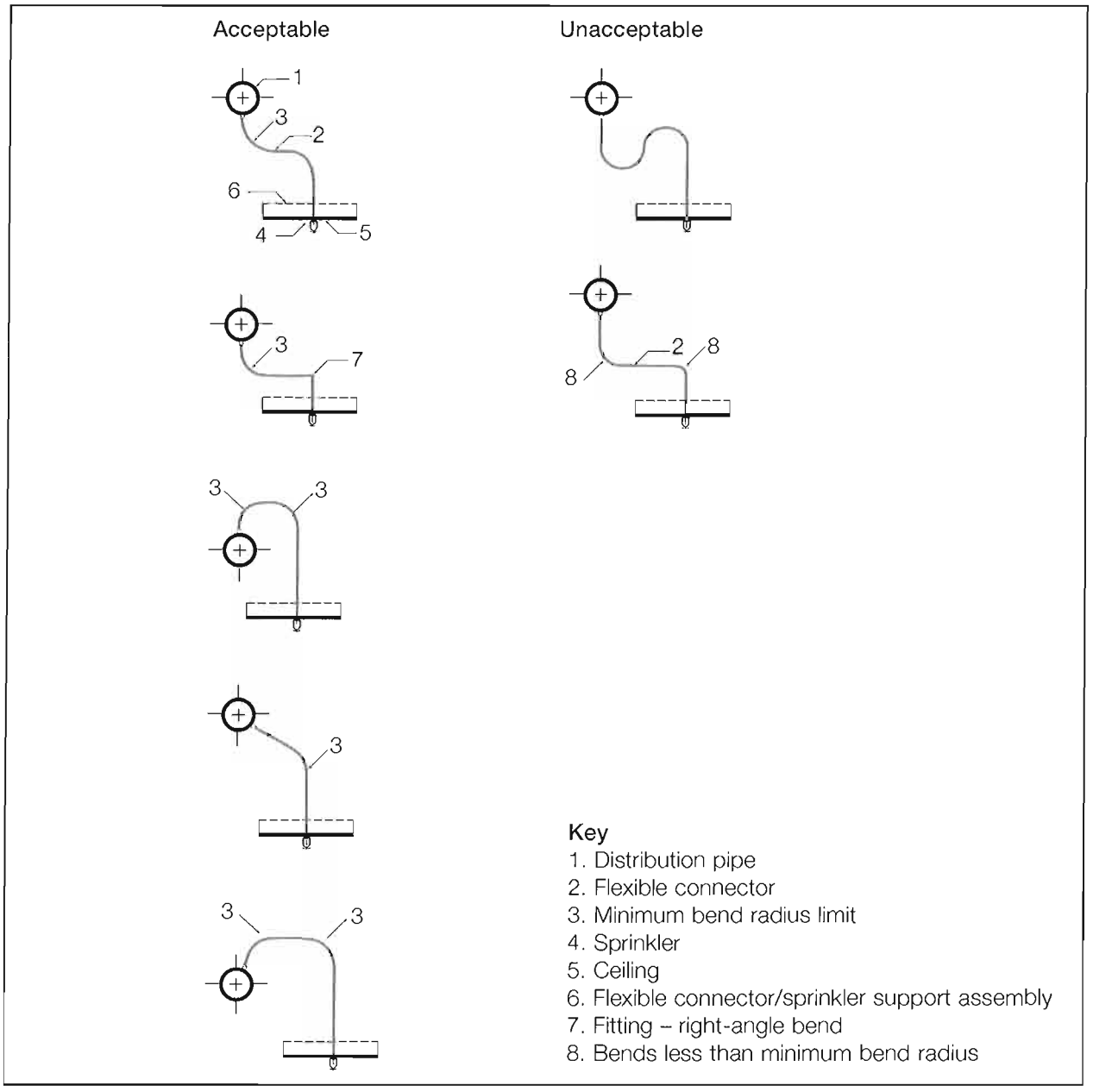

Figure TB227.F1. Acceptable single sprinkler flexible connector configurations

TB227.3 SPECIFICATIONS REFERENCED

BS 143 and 1256: 2000: *Threaded pipe fittings in malleable cast iron and cast copper alloy.*

BS 1387: 1985: *Specification for screwed and socketed steel tubes and tubulars and for plain end steel tubes suitable for welding or for screwing to BS 21 pipe threads* (obsolete, replaced by BS EN 10255: 2004).

BS 2035: 1966: *Specification for cast iron flanged pipes and flanged fittings* (proposed for obsolescence, partially replaced by BS EN 545: 1995).

BS 4622: 1970: *Specification for grey iron pipes and fittings* (proposed for obsolescence).

BS EN 545: 1995: *Ductile iron pipes, fittings, accessories and their joints for water pipelines. Requirements and test methods.*

BS EN 1057: 2006: *Copper and copper alloys. Seamless, round copper tubes for water and gas in sanitary and heating applications.*

BS EN 1254-1: 1998 *Copper and copper alloys. Plumbing fittings. Fittings with ends for capillary soldering or capillary brazing to copper tubes.*

BS EN 1254-2: 1998 *Copper and copper alloys. Plumbing fittings. Fittings with compression ends for use with copper* tubes.

BS EN 10216-2: 2002: *Seamless steel tubes for pressure purposes. Technical delivery conditions. Non-alloy and alloy steel tubes with specified elevated temperature properties (replaces BS 3601).*

BS EN 10216-5: 2004: *Seamless steel tubes for pressure purposes. Technical delivery conditions. Stainless steel tubes.*

BS EN 10217-7: 2005: *Welded steel tubes for pressure purposes. Technical delivery conditions. Stainless steel tubes.*

BS EN 10217-1: 2002: *Welded steel tubes for pressure purposes. Technical delivery conditions. Non-alloy steel tubes with specified room temperature properties.*

BS EN 10217-2: 2002: *Welded steel tubes for pressure purposes. Technical delivery conditions. Electric welded nonalloy and alloy steel tubes with specified elevated temperature properties.*

BS EN 10217-3: 2002: *Welded steel tubes for pressure purposes. Technical delivery conditions. Alloy fine grain steel tubes.*

BS EN 10217-5: 2002: *Welded steel tubes for pressure purposes. Technical delivery conditions. Submerged arc welded non-alloy and alloy steel tubes with specified elevated temperature properties.*

BS EN 10226-1: *Pipe joints where pressure tight joints are made on threads. Taper external threads and parallel internal threads – dimensions, tolerances and designation.*

BS EN 10241: 2000: *Steel threaded pipe fittings* (replaces BS 1740-1).

BS EN 10242: 1995: *Threaded pipe fittings in malleable cast iron.*

BS EN 10255: 2004: *Non-alloy steel tubes suitable for welding or threading. Technical delivery conditions.*

BS EN 10312: 2002: *Welded stainless steel tubes for the conveyance of aqueous liquids including water for human consumption. Technical delivery conditions.*

BS EN 12201-2: 2003: *Plastic piping systems for water supply. Polyethylene (PE). Pipes.*

BS EN 12201-3: 2003: *Plastic piping systems for water supply. Polyethylene (PE). Fittings*

ISO 65 *Carbon steel tubes suitable for screwing in accordance with ISO 7-1.*

LPS 1219-2.2: *Requirements for testing pipe couplings* (See Note below).

LPS 1260-2.2: *Requirements for testing plastic pipes for sprinkler systems* (See Note below).

Note: Loss Prevention Specifications are published by BRE Ltd (*http://www.bre.co.uk/*). Copies of the specification can be obtained from *http://www.redbooklive.com/lps.jsp*

Revision to BS EN 12845 Table 1

Relates to BS EN Table 1

TB228.1 INTRODUCTION

BS EN 12845: 2003 or 2004, Table 1 allows the use of OH3 protection for ST6 – Solid or slatted shelves over 1m and no more than 6m wide. OH3 protection is not suitable for this storage configuration, due to the potential shielding effects of the shelving. High hazard protection should be used with all ST6 storage configurations. This TB is issued as a temporary measure to correct Table 1, with immediate effect.

TB228.2 REVISION TO BS EN 12845 TABLE 1

Table TB228.T1 shall be used to replace EN Table 1

Table TB228.T1 Maximum storage height for OH3 protection
All clause references within the Table refer to BS EN 12845

	Maximum storage height[1] m	
Storage category	Free standing or block storage (ST1 – see 6.3.2)	Storage configurations (ST2, ST3, ST4 and ST5 see 6.3.2)[2]
Category I	4,0	3,5
Category II	3,0	2,6
Category III	2,1	1,7
Category IV	1,2	1,2

Note 1: For storage heights exceeding these values, see BS EN 6.2.3.1 and 7.2.
Note 2: OH protection is not suitable for ST6 (solid or slatted shelves over 1m and not more than 6m wide); use HH protection for ST6 storage, see BS EN 7.2.

LPC Rules for automatic sprinkler installations variations to BS EN 12845: 2009

TB229.1 INTRODUCTION

This Technical Bulletin introduces variations from BS EN 12845 to make the specification suitable for use. The Technical Bulletin includes *LPC Rules* amendments which have been drawn up by the Active Steering Group of RISCAuthority, either as modifications to the CEN 2009 amendments or as changes to the content of BS EN 12845.

TB229.2 GENERAL

A brief description of the change is given under each heading.

Revised or new text is shown in italic bold underlined font.

To aid understanding of some changes, deleted text has been depicted using strikethrough text.

Where changes have been introduced by this Technical Bulletin to the proposed amendments, the details of the change and, where appropriate, reasons for the change have been given.

Table notes have the status of recommendations whilst Table footnotes are requirements.

TB229.3 VARIATIONS TO BS EN 12845: 2009

TB229.3.1 BS EN Table 2

Description of changes:

- Renumber Note 3 to Note 2, column 4, row 2 and row 8;
- Change Note 2 to footnote[a], rows 2, 3, 4, 5, 7 and 8;
- Insertion of Note 2 as footnote [a].

Table TB229.T1 Limitations and protection requirements for different storage configurations BS EN Table 2 (amended)

Storage configuration	Layout limitations	Protection in addition to sprinklers at ceiling or roof	Applicable table notes:
ST1	Storage shall be confined to blocks not exceeding 150m² in plan area for C III and IV	None	(2, a)
ST2	Aisles between rows shall be not less than 2,4m wide	None	(a)
ST3	Storage shall be confined to blocks not exceeding 150m² in plan area	None	(a)
ST4	Aisles separating rows are equal or greater than 1,2m wide	Intermediate sprinklers are recommended	(1, a)
	Aisles separating rows are less than 1,2m wide	Intermediate sprinklers are required	(1)
ST5	Either the aisles separating rows shall be no less than 1,2m wide, or storage blocks shall be no more than 150m² in plan area	Intermediate sprinklers are recommended	(1, a)
ST6	Either the aisles separating rows shall be no less than 1,2m wide, or storage blocks shall be no more than 150m² in plan area	Intermediate sprinklers are required or, if this is impossible, continuous full height vertical bulkheads with Euroclass A1 or A2 or an equivalent in existing national classification systems shall be fitted longitudinally and transversely within each shelf	(1, a)

Note 1: When the ceiling is more than 4m above the highest level of stored goods, intermediate levels of in-rack sprinklers should be used.
~~**Note 2:** Storage blocks should be separated by aisles no less than 2,4m wide.~~
~~**Note 3:**~~ ***Note 2:*** Storage should be confined to blocks not exceeding 150m² in plan area for C I and C II.

[a] Storage blocks ***shall*** be separated by aisles no less than 2,4m wide.

TB229.3.2 BS EN Table 4

Description of change:

- Amend Note 2 to delete 'and alternate'.
- LPC Rules requirements change table note to footnote (b) and insert footnote (a) concerning alternate systems.

Table TB229.T2 — Design criteria for HHS with roof or ceiling protection only (Replacing BS EN Table 4)

Storage configuration	Maximum permitted storage height[1] m				Design density mm/min	Area of operation (wet or pre-action system[2, a, b]) m²
	Category I	Category II	Category III	Category IV		
ST1 Free standing or block stacking	5,3 6,5 7,6	4,1 5,0 5,9 6,7 7,5	2,9 3,5 4,1 4,7 5,2	1,6 2,0 2,3 2,7 3,0	7,5 10,0 12,5 15,0 17,5	260
			5,7 6,3 6,7 7,2	3,3 3,6 3,8 4,1 4,4	20,0 22,5 25,0 27,5 30,0	300
ST2 Post pallets in single rows ST4 Palletized racks	4,7 5,7 6,8	3,4 4,2 5,0 5,6 6,0	2,2 2,6 3,2 3,7 4,1	1,6 2,0 2,3 2,7 3,0	7,5 10,0 12,5 15,0 17,5	260
			4,4 ***4,8*** 5,3 ***5,6*** 6,0	3,3 ***3,6*** 3,8 ***4,1*** 4,4	20,0 ***22,5*** 25,0 ***27,5*** 30,0	300
ST3 Post pallets in multiple rows ST5 and ST6 Solid or slatted shelves	4,7 5,7	3,4 4,2 5,0	2,2 2,6 3,2	1,6 2,0 2,3 2,7 3,0	7,5 10,0 12,5 15,0 17,5	260

Note 1: The vertical distance from the floor to the sprinkler deflectors, minus 1m, or the highest value shown in the table, whichever is the lower.
Note 2: Dry ~~and alternate~~ systems should be avoided on High Hazard storage especially with the more combustible products (the higher categories) and the higher storage.
[a] ***LPC Rules requirements – Alternate systems are no longer permitted.***
[b] ***LPC Rules requirements – Should it nonetheless be necessary to install a dry system, the area of operation should be increased by 25%.***

TB229.3.3 BS EN Table 5

Description of change:

- Amend Note 2 to delete 'and alternate'.
- LPC Rules requirement – change part of table note 2 to table footnote.

Table TB229.T3 Design criteria for roof or ceiling sprinklers with in-rack sprinklers (Replacing BS EN Table 5)

Storage configuration	Maximum permitted storage height above the top level of in-rack protection[1] m				Design density mm/min	Area of operation (wet or pre-action system[2]) m²
	Category I	Category II	Category III	Category IV		
ST4 Palletized racks	3,5	3,4	2,2 2,6 3,2 3,5	1,6 2,0 2,3 2,7	7,5 10,0 12,5 15,0	260
ST5 and ST6 Solid or slatted shelves	3,5	3,4	2,2 2,6 3,2	1,6 2,0 2,3 2,7	7,5 10,0 12,5 15,0	260

Note 1: The vertical distance from the highest level of in-rack sprinklers to the top of the storage.
Note 2: Dry ~~and alternate~~ systems should be avoided on High Hazard storage especially with the more combustible products (the higher categories) and the higher storage.
[a] ***LPC Rules requirement – Should it nonetheless be necessary to install a dry system, the area of operation shall be increased by 25%.***

TB229.3.4 BS EN Clause 8.5.2

Description of changes:

- Insertion of LPC Rules requirement as fourth paragraph.

BS EN Clause 8.5.2 At water supplies

Additional LPC Rules requirement: ***Where a permanent flow test facility is not provided which returns the test flow to a water storage tank (cistern) or alternatively to a permanent drain, temporary measures shall be provided to safely dispose of the waste water.***

TB229.3.5 BS EN Table 11

Description of change:

- Insertion of LPC Rule requirement, column 2, row 7;
- Insertion of and LPC Rules requirement as footnote, row 8;
- Insertion of LPC Rules commentary and recommendation, row 9.

Table TB229.T4 — Minimum effective capacity of reduced capacity tanks (Replacing BS EN Table 11)	
Hazard class	Minimum effective capacity[a] m³
LH – Wet or pre-action	5
OH1 – Wet or pre-action	10
OH1 – Dry or alternate OH2 – Wet or pre-action	20
OH2 – Dry or alternate OH3 – Wet or pre-action	30
OH3 – Dry or alternate OH4 – Wet or pre-action	50
HHP and HHS	~~70~~ ~~but in no case less than 10% of the full capacity~~ *LPC Rules Requirement:* *2/3 of the value specified in BS EN Table 10 or BS EN 9.3.2.3* *or* *the value specified in BS EN Table 10 or BS EN 9.3.2.3 less the infill flow rate, in l/min, multiplied by 0.09, whichever is the greater* *See footnote[a]*
Additional LPC Rules requirement: [a] *When determining the minimum effective capacity of a reduced capacity tank, a maximum of 80% of an adjusted infill flow rate, verified by test, shall be used. The adjusted infill flow rate shall take into account any reductions in flow due to static head and friction between the test point and the tank infill at a period of maximum demand.*	
LPC Rules commentary and recommendation: *The water supplier should be consulted before using town mains as infill for reduced capacity tanks. It is essential to establish that the performance of the town main will not depreciate over the life of the sprinkler system water supply.*	

TB229.3.6 BS EN Clause 9.6.4

Description of change:

- LPC Rules requirement replacing BS EN Clause 9.6.4.

BS EN Clause 9.6.4 Combined water supplies

~~Combined water supplies shall be superior single or duplicate water supplies designed to supply more than one fixed fire fighting system, as for example in the case of combined hydrant, hose and sprinkler installations.~~

~~**Note:** Some countries may not allow sprinkler systems to be fed from a combined supply.~~

~~Combined supplies shall fulfil the following conditions:~~

~~a) the systems shall be fully calculated;~~

~~b) the supply shall be capable of supplying the sum of the simultaneous maximum calculated flows from each system. The flows shall be corrected up to the pressure required by the most demanding system;~~

~~c) the duration of the supply shall be no less than that required for the most demanding system;~~

~~d) duplicate pipe connections shall be installed between the water supplies and the systems.~~

TB229.3.6 Combined water supplies (Replacing BS EN 9.6.4)

The sprinkler system pumps and water source shall be separate from any hydrant system pumps and water source.

TB229.3.7 BS EN Table 17

Description of change:

- LPC Rules requirement replacing BS EN Table 17.

Table TB229.T5 Maximum size of wet pipe and pre-action installations (Replacing BS EN Table 17)

Hazard class	Maximum size of protection per control valve set m²
LH	10 000*m²*
OH, including any LH sprinklers	12 000*m²* except as allowed in annexes D and F
HH excluding in-rack sprinkler protection, including any OH or LH sprinklers,	9 000*m²*
HH in-rack sprinkler protection Categories I and II Categories III and IV	~~9000m²~~ *1 000 sprinklers* *2 000 sprinklers*

TB229.3.8 BS EN Clause 13.4.4

Description of change:

- LPC Rule requirement, amendment of fourth bullet point.

TB229.3.8 Minimum sprinkler discharge pressure
(Replacing BS EN Clause 13.4.4)

The pressure at the hydraulically most unfavourably situated sprinkler, when all the sprinklers in the area of operation are in operation, shall be not less than that required to achieve the density specified in 13.4.1 or the following, whichever is the higher:

- 0,70 bar in LH;
- 0,35 bar in OH;
- 0,50 bar in HHP and HHS except for in-rack sprinklers;
- 2,00 bar for *K80* in-rack sprinklers;
- *1,00 bar for K115 in-rack sprinklers.*

Protection of roof spaces, floor and ceiling voids

TB230.1 SCOPE

The requirements of this Technical Bulletin shall be used as an alternative to BS EN Clause 5.4 when providing protection to floor voids, ceiling voids and roof spaces but excluding voids or spaces used as part of a smoke and heat control system.

TB230.2 DEFINITIONS

TB230.2.1 Cavity barrier

A separating element that resists the passage of flame, heat and fire gases for a period of 30 minutes when evaluated to BS 476-22.

TB230.2.2 Air conditioning plenums

An unoccupied space, typically a ceiling void, in which air is moved or circulated throughout the confines of the space at above or below atmospheric pressure, for heating, ventilation or air conditioning purposes.

TB230.2.3 Smoke and heat control systems

Arrangement of components in a building to limit the effects of smoke and heat from a fire.

TB230.3 ROOF SPACES, FLOOR AND CEILING VOIDS

TB230.3.1 Concealed spaces such as roof spaces, floor or ceiling voids

Concealed spaces such as roof spaces, floor or ceiling voids (between floors) shall be protected appropriately as follows:

(a) concealed spaces 0,8m or less in depth shall be:

(1) sprinkler protected; or

(2) compartmentalised by vertical cavity barriers which shall enclose areas no greater than 250m^2;

(b) concealed spaces more than 0,8m deep shall be sprinkler protected;

(c) concealed spaces which vary in depth shall be either:

(1) sprinkler protected throughout the communicating space; or

(2) sprinkler protected throughout the sections greater than 0,8m in depth, with the sections 0,8m or less in depth compartmentalised with vertical cavity barriers which shall enclose areas no greater than 250m^2.

TB230.3.2 Ceiling integrity

Where sprinkler protection is provided at the ceiling level, it is essential that there should be no openings in the ceiling that provide communication between the room below and the void through which the fire may be transmitted in the incipient stages.

TB230.4 CONCEALED SPACE PROTECTION

TB230.4.1 General

Where protection of the hazard is to TB222: *Ordinary Hazard Group 3 protection using Enhanced Protection Extended Coverage sprinklers*, the protection in the concealed space shall be to TB223.

For all protection other than EPEC, the protection in the concealed space shall be to Light Hazard (LH) when the main hazard is LH, and OH1 in all other cases and pipework arrangements shall be in accordance with BS EN Clause 17.3.

TB230.4.2 Ceiling air conditioning plenums

Where ceilings voids are used as plenums for ventilation or air-conditioning systems, protection shall be provided both below the ceiling and within the ceiling plenum void and the following requirements shall apply:

(a) the plenum shall be protected by a suitable automatic fire detection system complying with BS 5839-1 and BS 6266 as appropriate; operation of the ceiling void fire detection system shall automatically shut down the plenum ventilation system;

(b) sprinkler installation pipe sizing shall be determined using the fully calculated method;

(c) the sprinkler area of operation shall be assumed to be the lesser of:

  (1) the area of operation stated in BS EN Table 3 plus four sprinklers in the plenum void; or

  (2) the area of operation stated in BS EN Table 3 plus the number of sprinklers in the plenum void;

(d) sprinklers beneath the ceiling shall have a 'quick' response thermal sensitivity rating; and

(e) sprinklers located within the plenum shall have a 'standard' response thermal sensitivity rating.

TB230.5 PUBLICATIONS REFERRED TO

- BS 476-22: *Fire tests on building materials and structures. Methods for determination of the fire resistance of non-loadbearing elements of construction.*
- BS 5839-1: *Fire detection and fire alarm systems for buildings. Code of practice for system design, installation, commissioning and maintenance.*
- BS 6266: *Code of practice for fire protection for electronic equipment installations.*

Pipe sizing

Replaces BS EN Clauses 13.1.1 and 13.3.5

TB231.1 SCOPE

The requirements of this Technical Bulletin are applicable to systems in respect of pipe sizing, amending the requirements of BS EN Clauses 13.1.1 and 13.3.5.

The Technical Bulletin requires that all high hazard systems pipe sizing is determined by hydraulic calculation, making the practice of high hazard pipe sizing using pre-calculated pipe sizing tables obsolete.

Light Hazard (LH) and Ordinary Hazard (OH) pre-calculated pipe sizing practice remains unchanged.

TB231.2 PIPE SIZING

TB231.2.1 Pipe sizing (replaces BS EN Clause 13.1.1)

Pipe sizes shall be determined using the methods identified:

LH and OH systems

- pre-calculated systems, where the pipe diameters are partly taken from tables and partly calculated (see BS EN Clauses 13.3.1, 13.3.2, 13.3.3 and 13.3.4); or
- fully calculated systems where all pipe diameters are determined by hydraulic calculation (see BS EN Clause 13.4).

The designer may choose between the two systems except where gridded or looped layouts are used, where full calculations shall always be used;

all HH systems

- fully calculated systems where all pipe diameters are determined by hydraulic calculation (see BS EN Clause 13.4).

TB231.2.2 High hazard – HHP and HHS pre-calculated systems (replaces BS EN Clause 13.3.5)

Pre-calculated pipe sizing shall not be used for HH systems.

TB231.2.3 Currency of BS EN Pipe sizing clauses

BS EN 13.1.1 'Pipe sizing' – replaced by TB231.2.1

BS EN 13.2.1 'Pipe friction loss' – current

BS EN 13.2.2 'Static pressure difference' – current

BS EN 13.2.3 'Velocity' – current

BS EN 13.2.4 'Pressure loss through fittings and valves' – current

BS EN 13.2.5 'Accuracy of calculations' – current

BS EN 13.3.1 'General' – current

BS EN 13.3.2 'Location of design points' – current

BS EN 13.3.3 'Light hazard' – LH – current

BS EN 13.3.4 'Ordinary hazard' – OH – current

BS EN 13.3.5 'High hazard – HHP and HHS (except intermediate level sprinklers)' – replaced and made obsolete by TB231.2.2

Sprinkler installation control valve sets

Implementation date: It is recommended that this Technical Bulletin should be implemented for all contracts let after 31 December 2009

Supplements BS EN Clauses 15, 16 and D.3.6

TB232.1 SCOPE

This Technical Bulletin specifies the types of alarm valve which may be used and the design of installation control valves in installations other than life safety installations. Measures are specified to ensure the continuous supply of water to sprinkler installations whilst alarm valve maintenance is undertaken. Alternate alarm valves have been excluded on the grounds of causing accelerated corrosion to sprinkler pipework.

TB232.2 DEFINITIONS

TB232.2.1 Control valve set (BS EN Clause 3.17)

Assembly comprising at least one alarm valve, stop valves and all the associated valves and accessories for the control of one sprinkler installation.

TB232.3 GENERAL

TB232.3.1 Nominal size

Stop valves and alarm valves shall be the same nominal diameter as the upstream or downstream pipework.

TB232.3.2 Alarm connections (supplements BS EN Clause 16.1.1)

Each control valve set shall be connected to a water motor alarm complying with BS EN 12259-4 and an electrical device for remote alarm indication, both located as close as possible to the alarm valve. A single alarm motor and gong may be common to a group of wet alarm valves providing that they are in the same valve room and an indicator is fitted to each alarm valve to show when it is operating. There shall be a low level alarm line drain in close proximity to the alarm valve(s). The drain shall be arranged so that any flow of water from the drain can be seen.

Each water motor alarm shall be prominently marked with the number of the installation control valve set or sets it is connected to.

TB232.3.3 Monitoring

Consideration should be given to the fitting of tamper-proof devices which monitor the status of control valve set stop valves, capable of interrupting or controlling the flow of water to sprinklers.

Where fitted, the monitoring devices shall be electrically connected to a control and indicating panel complying with BS EN Clause D.3.7.

COMMENTARY AND RECOMMENDATIONS ON TB232.3.3

On zoned sprinkler installations where life safety requirements are applicable monitoring should fully comply with BS EN Annex D.

The necessity for monitoring control valves on installations, other than life safety installations should be determined during the consultation process specified in TB205.

TB232.4 TYPES OF ALARM VALVE

The following types of alarm valve are considered suitable for sprinkler service:

- Alarm valve, dry (BS EN Clause 3.6) ;
- Alarm valve, pre-action (BS EN Clause 3.7);
- Alarm valve, wet (BS EN Clause 3.8).

COMMENTARY AND RECOMMENDATIONS ON TB232.4

Alternate alarm valves are no longer considered appropriate for sprinkler service due to the potential for accelerating the rate of pipework corrosion and have therefore been excluded from the above list.

Alternate alarm valves in existence before the introduction of this Technical Bulletin may continue to be operated and maintained in accordance with the design standard to which they were installed and commissioned.

TB232.5 INSTALLATION CONTROL VALVE ARRANGEMENTS

Two main installation control valve arrangements are described in this Technical Bulletin. Either of these two arrangements shall be used.

COMMENTARY AND RECOMMENDATIONS ON TB 232.5

A single installation control valve set will not be permissible for installations which are not life safety installations.

TB232.5.1 Installation main control valve with by-pass arrangement

TB232.5.1.1 General

The installation main control valve set shall have two normally open stop valves one each side (upstream and downstream) of a single wet alarm valve with a bypass connection of the same nominal bore around all three valves. The bypass shall be fitted with a normally closed stop valve, see Figure TB232.F1.

TB232.5.1.2 Application

The installation main control valve with a by-pass arrangement may be used in wet pipe installations.

TB232.5.1.3 Alarm valve maintenance

During maintenance of the wet alarm valve, close stop valves (2) and (4) and open stop valve (5). On completion of maintenance, return the stop valves to their normal positions.

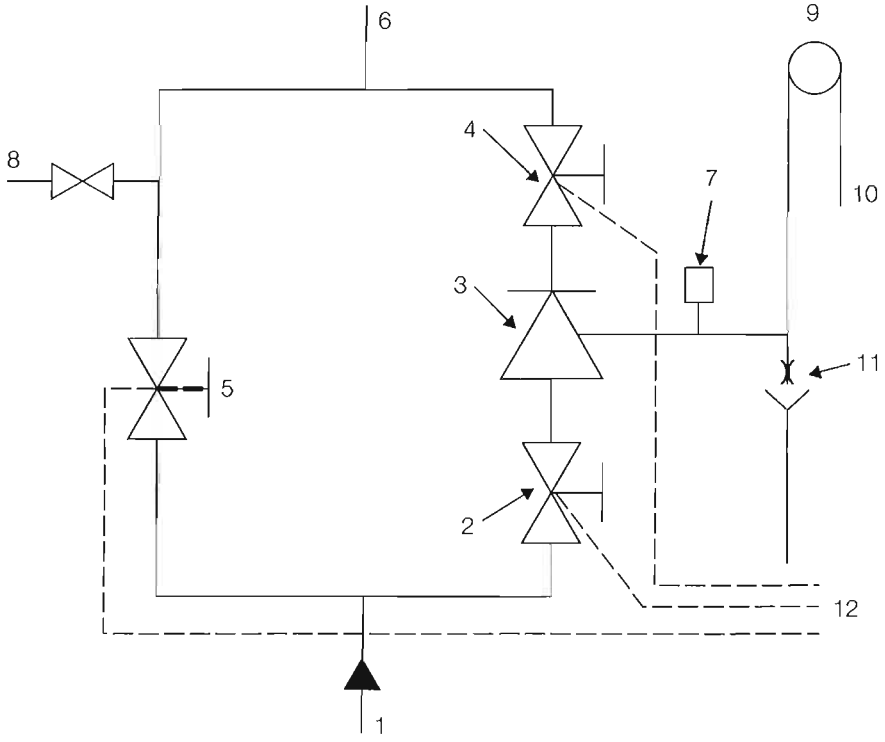

Key

1. Water supply
2. Upstream stop valve
3. Installation wet alarm valve
4. Downstream stop valve
5. Bypass stop valve
6. Installation
7. Electrical device for remote alarm indication
8. Installation drain
9. Water motor alarm
10. Alarm line flow to waste
11. Alarm line drain with visible out flow
12. Stop valve monitoring connections

Figure TB232.F1 Wet pipe installation control valve arrangement with bypass

TB232.5.2 Duplicate installation main control valve

TB232.5.2.1 General

A stop valve on each side (ie upstream and downstream) of each of a pair of alarm valves; each set of three valves connected in parallel to the feed main, see Figure TB232.F2. One set of three valves shall be designated as the operational installation main control valve set with the upstream and downstream stop valves normally open. The stop valves on the secondary installation valve set shall be normally closed.

TB232.5.2.2 Application

Duplicate installation control valves shall be used on dry-pipe and pre-action installations or as an alternative arrangement to the installation control valve with a bypass on wet pipe systems

TB232.5.2.3 Alarm valve maintenance

Before carrying out work on the operational installation control valve set (3a), check the isolated alarm valve set (3b) for condition and fitness for service. Commission the alarm valve set (3b) in accordance with the suppliers' instructions and open the upstream (2b) and downstream (4b) stop valves. Open alarm line isolating valve (5b). When the alarm valve (3b) is in service, close the upstream stop valve (2a), downstream stop valve (4a) and alarm line isolating valve (5a), isolating the alarm valve (3a). Service the alarm valve (3a) in accordance with the suppliers' instructions.

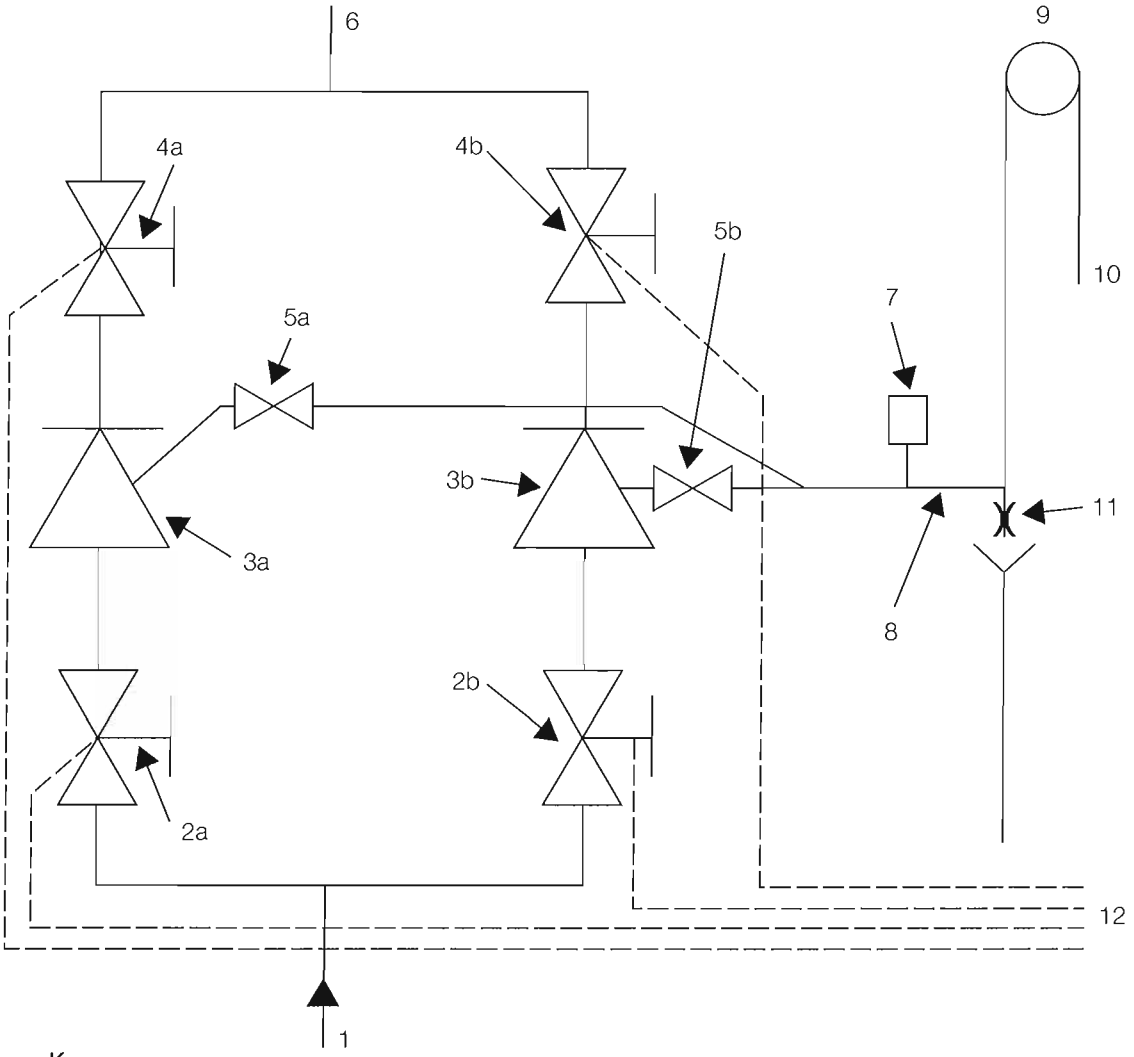

Key

1. Water supply
2a. Upstream stop valve - alarm valve 'A'
2b. Upstream stop valve - alarm valve 'B'
3a. Installation alarm valve 'A'
3b. Installation alarm valve 'B'
4a. Downstream stop valve - alarm valve 'A'
4b. Downstream stop valve - alarm valve 'B'
5a. Alarm line isolating valve alarm valve 'A'
5b. Alarm line isolating valve alarm valve 'B'
6. Installation
7. Electrical device for remote alarm indication
8. Alarm line connection
9. Water motor alarm
10. Alarm line flow to waste
11. Alarm line drain with visible out flow
12. Stop valve monitoring connections

Figure TB232.F2 Duplicate installation control valve arrangement

TB232.5.3 Installation control valve location and security

The installation control valve shall be in a location readily accessible to the fire and rescue service responding to a fire alarm, preferably at the access level to the property.

All installation control valve stop valves shall be secured in their appropriate set position, either fully opened or closed, by padlocked straps.

COMMENTARY AND RECOMMENDATIONS ON TB 232.5.3

Where condition monitoring is not fitted to stop valves or where installation control valves may be vulnerable to tampering, a higher level of security should be considered.

TB232.6 TAIL END DRY AND PRE-ACTION VALVES

Tail end dry pipe valves and pre-action valves may be installed without a duplication where the fire insurer has been consulted and will permit the temporary disconnection of the water supply for valve maintenance purposes.

Water supplies for life safety systems

Implementation date: It is recommended that this Technical Bulletin should be implemented for all contracts let after 31 December 2009

Supplementary information relating to Approved Document B

TB233.1 SCOPE

This Technical Bulletin gives details of water supplies for life safety sprinkler systems and provides an interpretation of how the guidance given in Approved Document B (ADB) may be complied with whilst fully complying with the *LPC Rules for automatic sprinkler installations*. Other ADB compliant interpretations may not comply with the *LPC Rules* and may not be suitable for property insurance purposes.

TB233.2 DEFINITIONS

TB233.2.1 Life safety system (BS EN Clause 3.39)

Term applied to sprinkler systems forming an integral part of measures required for the protection of life, especially where evacuating the building depends on the performance of the sprinkler system and sprinklers are required expressly for life safety purposes.

TB233.3 BACKGROUND

Applications for building works should follow the guidance contained in Approved Document B (Volumes 1 and 2) available from Communities and Local Government (*http://www.planningportal.gov.uk/england/professionals/en/1115314683674.html*).

Volume 2 – Buildings other than dwellinghouses provides guidance on sprinkler systems, identifying water supplies that should be provided where life safety is a consideration, see Appendix 1 Extract ADB *General introduction – Sprinkler systems*.

TB233.4 WATER SUPPLIES FOR LIFE SAFETY SPRINKLER SYSTEMS

TB233.4.1 Water supplies

The following water supplies for (non-residential) life safety sprinkler systems are deemed to comply:

(i) two single water supplies complying with BS EN Clause 9.6.1 where each is independent of the other and where;

1. one supply may be a pressure tank for LH and OH1 occupancies only;
2. only one supply may be a reduced capacity water storage tank, complying with TB224.5, BS EN Clause 9.3.4 and TB229.3.5;
3. water storage tank selection complies with TB224.7;

(ii) two stored water supplies, where:

1. gravity or suction tanks satisfy the requirements of at least TB224.6.1: *Superior twin water supplies*; and
2. any reduced capacity water storage tank complies with TB224.5, BS EN Clause 9.3.4 and TB229.3.5; and
3. water storage tank selection complies with TB224.7.

COMMENTARY AND RECOMMENDATIONS ON TB233.4

Pump arrangements should comply with TB210.2.

Where direct town main connections or reduced capacity tanks dependent on inflow are proposed a written agreement should be obtained from the water supplying company at the design stage agreeing that the user or his agent may undertake quarterly flow tests at the maximum demand flow. If it is not possible to obtain a written agreement to undertake flow tests on the town main, direct town main connections and reduced capacity suction tanks should not be used.

TB233.4.2 Equivalent capacity of stored water supplies

Whichever water storage arrangement is employed the total design capacity of the water supply, including any inflow for a reduced capacity tank should be at least equivalent to a single full holding capacity water storage tank complying with BS EN Table 9 or BS EN Clause 9.3.2.3 as appropriate.

TB233.4.3 Isolation of water supplies

Where pumps are used to draw water from two tanks, then each pump shall be arranged to draw water from either tank and arranged so that any one pump or either tank can be isolated.

TB233.4.4 Use of sprinkler water supplies for other purposes

The sprinkler water supplies shall not be used as connections for other services or other fixed fire fighting systems.

TB233.5 EXTENT OF SPRINKLER PROTECTION AND COMPLIANCE

To satisfy the guidance given in ADB it may be permissible not to sprinkler protect certain parts of a building when sprinkler protection is installed as a compensatory feature to address a specific risk or hazard.

COMMENTARY AND RECOMMENDATIONS ON TB233.5

Where the extent of sprinkler protection does not comply with BS EN Clause 5 the sprinkler system will not comply with either EN 12845 or the *LPC Rules for automatic sprinkler installations* and should not be certified to either specification. Additionally, the property may be considered as unsprinklered for property protection and insurance purposes.

APPENDIX 1: APPROVED DOCUMENT B (FIRE SAFETY) VOLUME 2 – BUILDINGS OTHER THAN DWELLINGHOUSES *EXTRACT*

SPRINKLER SYSTEMS

0.16 Sprinkler systems installed in buildings can reduce the risk to life and significantly reduce the degree of damage caused by fire. Sprinkler protection can also sometimes be used as a compensatory feature where the provisions of this Approved Document are varied in some way. Where sprinklers are provided it is normal practice to provide sprinkler protection throughout a building. However, where sprinklers are being installed as a compensatory feature to address a specific risk or hazard, it may be acceptable to protect only part of a building. Further guidance can also be found in *Sprinklers for Safety: Use and benefits of incorporating sprinkler in buildings and structures*, BAFSA 2006 (ISBN: 0 95526 280 1)

There are many alternative or innovative fire suppression systems available. Where these are used it is necessary to ensure that such systems have been designed and tested for use in buildings and are fit for their intended purpose.

0.17 Where a sprinkler system is specifically recommended within this document it should be provided throughout the building or separated part and be designed and installed in accordance with either:

(a) for dwellings and residential buildings, BS 9251: 2005: *Sprinkler systems for residential and domestic occupancies – Code of practice* and BS DD 252 *Components for residential sprinkler systems – Specification and test methods for residential sprinklers*; or

(b) for non-residential buildings or dwellings and residential buildings outside the scope of BS 9251, either:

  (i) the requirements of BS 5306-2: 1990 including the relevant hazard classification together with the additional requirements for life safety;

  (ii) the requirements of BS EN 12845: 2004 including the relevant hazard classification together with the special requirements for life safety systems.

Note: Any sprinkler systems installed to satisfy the requirements of Part B of the Building Regulations should be regarded as a life safety system.

However there may be some circumstances where a particular life safety requirement, specified in either BS 5306-2 or BS EN 12845 is inappropriate or unnecessary.

0.18 Water supplies for non-residential sprinkler systems should consist of either:

(a) for systems designed and installed to BS 5306-2:

  (i) two single water supplies complying with BS 5306-2 Clause 13.1.2 where each is independent of each other; or

  (ii) two stored water supplies where:

    1. gravity or suction tanks should be either Type A, Type D or their equivalent (see BS 5306-2 Clause 17.4.1.6); and

    2. any pump arrangement should comply with BS 5306-2 Clause 17.4.1.5;

    3. the capacity of each tank should be equivalent to at least half the specified minimum water volume of a single full capacity tank, appropriate to the hazard; or

    4. one tank should be equivalent to half the specified water volume of a single full capacity tank and the other shall not be less than half the minimum volume of a reduced capacity tank (see BS 5306-2, Table 25), appropriate to the hazard; and

Note: The requirements for inflow should be met.

5. whichever water storage arrangement is used at (3) or (4) above, the total design capacity of the water supply, including any inflow for a reduced capacity tank should be at least equivalent to a single full holding capacity tank complying with Table 21, 22, 23, 24 as appropriate to the hazard and pipework design.

(b) for systems designed and installed to BS EN 12845:

(i) two single supplies complying with BS EN 12845 Clause 9.6.1 where each is independent of the other; or

(ii) two stored water supplies where:

1. gravity or suction tanks should satisfy all the requirements of BS EN 12845 Clause 9.6.2 b) other than capacity; and

2. any pump arrangements should comply with BS EN 12845 Clause 10.2; and

3. the capacity of each tank is equivalent to half the specified minimum water volume of a single full holding capacity tank appropriate to the hazard; or

4. one tank should be at least equivalent to half the specified water volume of a single full capacity tank and the other shall be not less than the minimum volume of a reduced capacity tank BS EN 12845 Clause 9.3.4, appropriate to the hazard;

5. whichever water storage arrangement is used at (3) or (4) above, the total design capacity of the water supply, including any inflow for a reduced capacity tank should be at least equivalent to a single full holding capacity tank complying with BS EN 12845 Table 9 or Clause 9.3.2.3 as appropriate to the hazard and pipework design.

Where pumps are used to draw water from two tanks, then each pump should be arranged to draw water from either tank and arranged so that any one pump or either tank can be isolated.

The sprinkler water supplies should be generally not be used as connections for other services or other fixed fire fighting systems.